DESIGNJET T770 & T1200 printer series

Service manual

© 2010 Hewlett-Packard Development Company, L.P.

1st edition

Legal notices

This document contains proprietary information that is protected by copyright. All rights are reserved. No part of this document may be photocopied, reproduced, or translated to another language without the prior written consent of Hewlett-Packard Company.

Table of contents

1 Troubleshooting 1

Using the Front Panel 2
General troubleshooting 3
Paper-handling troubleshooting 6
Print-quality troubleshooting 6
Ink-supplies troubleshooting 32
Connectivity troubleshooting 48

2 System Error Codes 53

Introduction 54
Printer logs 54
What to do if the Front Panel is blank 55
Continuable and Non-Continuable Error Codes 56
System Error Code Brief Descriptions 56
System Error Codes—Full Descriptions 58
Appendix A: How to troubleshoot SE 79:04 77
Appendix B: Updating firmware in diagnostics boot mode 89
Appendix C: Obtaining the printer log and the diagnostics package 90
Appendix D: How to check the display list memory for an HP-GL/2 job 92

3 Diagnostics Menu 94

Introduction 95
Diagnostic Tests and Utilities 96

4 Service Menu 128

Introduction 129
Service Utilities 129
Service Calibrations 147

5 Parts and Diagrams 159

Introduction 160
Printer Support 161
Center Covers (Front) 162
Roll Covers 163
Center Covers (Rear) 164
Right Cover 165

Left Cover 166
Right Hand Assemblies 167
Left Hand Assemblies 168
Carriage Assembly 169
Scan-Axis Assemblies 170
Paper Path Assemblies (Front) 171
Paper Path Assemblies (Rear) 172
Roll Supports 173
Tools 1 174
Tools 2 175
Miscellaneous Parts 176

6 Removal and Installation 177

Introduction 180
Customer Self Repair parts 182
Service Calibration Guide to Removal and Installation 184
Belt Assembly 187
Bin Assembly 188
Bi-stable Springs (T1200 only) 191
Bumpers, Left and Right 197
Cable Harness 200
Carriage and Cutter Assembly 208
Carriage Bushing, Rear 217
Carriage Cover and Carriage Latch 219
Carriage Rail Oiler 224
Carriage PCA 226
Cleanout 231
Converger 233
Cover, Front 235
Cover, Left 236
Cover, Rear 240
Cover, Right 241
Cover, Top 244
Cutter Assembly 247
Drop Detector 251
EE Box 253
Electronics Module Main PCA and PSU 256
Encoder Disk and Encoder Sensor 260
Encoder Strip 262
Encoder Strip, spring and attachment nut 263
Formatter 266
Freewheel Assembly 267
Front Panel 270
Front Trim, Left 273
Front Trim, Right 275
Full Bleed Foam 277
Hard Disk Drive 278

Ink Cartridge Door, Left 279
Ink Cartridge Door, Right 281
Ink Supply Station, Left 283
Ink Supply Tubes 287
Ink Supply Tubes Support Rail 294
Line Sensor 296
Media Advance Drive 302
Media Lever 309
Media Lever Position Sensor 311
Media Output Assembly 313
Out-of-paper Sensor 315
Panel, Left 318
Pen to Paper Space (PPS) Solenoid 320
Pinch Arm Assembly (T1200 only) 322
Pinchwheel Assembly 325
Print Zone Overdrive 333
PSU 337
Real-time Clock Battery 339
Roll Cover Bumpers, Lower 340
Roll Cover Bumpers, Upper 343
Roll Cover, Lower (T1200 only) 346
Roll Cover, Upper 350
Roll Guide, Left 352
Roll Guide, Right 353
Roll Support, Lower Left (T1200 only) 354
Roll Support, Lower Right (T1200 only) 355
Roll Support Sensor, Lower Left (T1200 only) 357
Roll Support Sensor, Upper Left (T1200 only) 358
Roll Support, Upper Left 359
Roll Support, Upper Right 361
Scan-axis Motor 363
Service Station 367
Single-sheet Sensor 371
Spindle 373
Spittoon, Left 374
Starwheel Assembly 375
Starwheel Lifter, Left 377
Starwheel Lifter, Right 379
Starwheel Motor 382
Trailing Cable 384
Wall Spacers 391
Window 394
Window Position Sensor 398

7 Preventive Maintenance 400

Preventive Maintenance 401
Preventive Maintenance Kits 406

Appendix A Front-panel menu maps 408
HP Designjet T770 409
HP Designjet T770 HD 410
HP Designjet T1200 411

Appendix B CSR installation fliers 412
Cutter assembly 413
Freewheel assembly 415
Freewheel assembly (screwdriver) 417
Left side panel (T1200) 419
Pinch arm assembly 421
Pinch arm assembly (screwdriver) 423
Roll cover upper bumpers 425
Roll cover upper bumpers (screwdriver) 427

1 Troubleshooting

- Using the Front Panel
- General troubleshooting
- Paper-handling troubleshooting
- Print-quality troubleshooting
- Ink-supplies troubleshooting
- Connectivity troubleshooting

Using the Front Panel

HP Designjet T1200 series

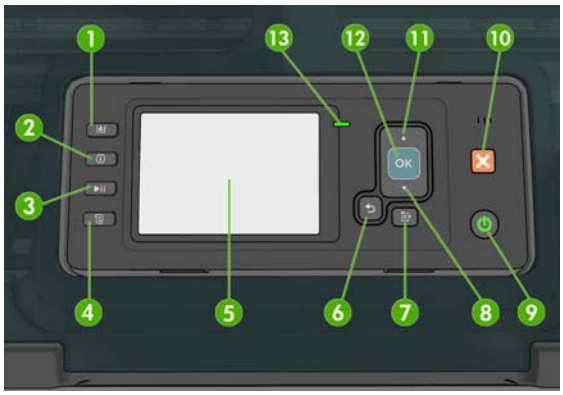

HP Designjet T770 series

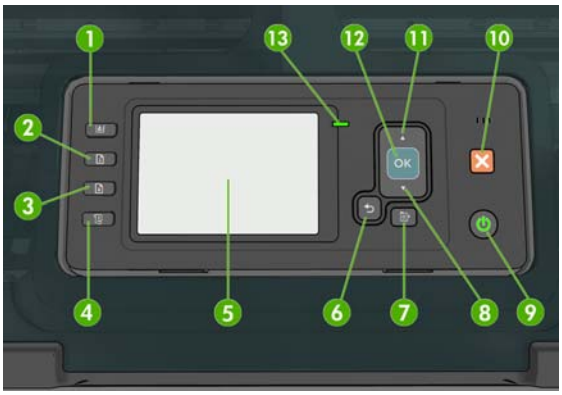

The front panel has the following components, starting with the four direct-access keys:

1. View ink levels key.
2. View information key. By pressing this key repeatedly, you can see information about all loaded papers (roll 1, roll 2, sheet) and about the printer's connection to the computer.
3. Pause printing key (T1200 series) pauses printing after finishing the current page. Press the key again to restart printing. This can be useful, for instance, when you want to change or load a roll.

   Unload paper key (T770 series) unloads the currently-loaded paper (roll or sheet).
4. Form feed and cut key.
5. Front-panel display - Displays errors, warnings and information on using your printer.
6. Back key - To go to the previous step in a procedure or interaction. To go to the upper level, or leave the option in the menu, or when given an option.
7. Menu key - Press to return to the main menu of the front-panel display. If you are already on the main menu it will display the status screen.
8. Down key - To go down in a menu or option, or to decrease a value, for example when configuring the front-panel display contrast or the IP address.
9. Power key - To turn the printer off or on, it also has a light to indicate the printer's status. If the power key light is off the printer is off. If the power key light is blinking green, the printer is starting up. If the power key light is green on, the printer is on. If the power key light is amber on, the printer is in standby. If the power key light is blinking amber, the printer needs attention.
10. Cancel key - To abort a procedure or interaction.
11. Up key - To go up in a menu or option, or to increase a value, for example when configuring the front-panel display contrast or the IP address.

12. OK key - To confirm an action while in a procedure or interaction. To enter in a submenu in the menu. To select a value when given an option. If the status screen is displayed, this key takes you to the main menu.

13. Status light - Indicates the printer's status. If the Status light is solid green, the printer is ready. If it is flashing green, the printer is busy. If it is solid amber, there is a system error. If it is flashing amber, the printer needs attention.

Table 1-1 Service Key Combinations

Label	Description
Diagnostic mode	With the printer off, press and hold the **Up** and **OK** keys. While holding the **Up** and **OK** keys down, press the **Power** key to turn on the printer. Wait until the HP logo appears in the front-panel display, then release all three keys.
Service menu (service engineers only)	From the main menu, press and hold the **Up** and **Cancel** keys.
Service menu (for users)	From the main menu, press and hold the **Down** and **Cancel** keys.

For a full list of front-panel options and how to reach them, see Front-panel menu maps on page 408.

General troubleshooting

This chapter will guide you through the relevant steps to take when troubleshooting the printer.

Troubleshooting system error codes

System Error Codes on page 53 contains a list of system error codes and their respective descriptions and recommended corrective actions. Try only one recommended action at a time and check whether the error code has disappeared.

If you have an error code which is not documented in this Service Manual or you have an error which you cannot resolve, then report the error to the HP Response Center or the nearest HP Support Office. When reporting the error, have the following information ready:

- Model and Serial Number of the printer.
- Which firmware revision the printer is using (See Note below). Check firmware in Utilities / Statistics / Code rev.
- The complete error number (See Note below).
- The Service Configuration Print.
- The Current configuration sheet.
- Which software application the customer is using (name, version, etc.).

NOTE: When reporting the System Error Code, make sure that you supply the full Error Code and the firmware version. Without this information, HP Support Personnel cannot help you.

Performing a service test on a failed assembly

If possible, always perform a Service Test on the component/assembly that you are about to replace, just to make sure that is the component/assembly that has failed.

NOTE: If the test on that component/assembly passes, you should **not** replace it.

For information on the Service Tests and how to use them see Diagnostics Menu on page 94.

Performing the necessary service calibrations

Is the printer calibrated correctly after replacing a component? For information on the Service Calibrations and how to use them see Service Menu on page 128.

NOTE: Remember that certain Calibrations are required even if an Assembly has been disassembled to gain access to another Assembly or Component.

Solving print-quality problems

Whenever a print-quality problem appears, it is advisable to print the Diagnostic Print to help diagnose the problem. The Diagnostic Print will help you differentiate between possible printhead errors and other problems such as incorrect front-panel selection, driver or RIP configuration or mechanical problems.

The Front Panel is blank

See What to do if the Front Panel is blank on page 55.

The printer does not power on

See What to do if the Front Panel is blank on page 55.

The printer continuously rejects printheads

1. Clean the flex contacts on the Printhead and in the Carriage Assembly using the Carriage Interconnect Wiper and try again.
2. If **all** the Printheads are rejected (the status message on the Front Panel does **not** show "OK" for **all** the Printheads) then perform the Electronic Module Test. See Electronics Module Test on page 106.

Cover sensors are not working

1. Perform the Sensors Test. See Sensors Test on page 113.
2. Check that the cable for the faulty sensor is not damaged and is connected correctly.
3. Replace the faulty Sensor.

The line sensor has problems detecting paper

1. Check the type of paper that is being used since the Line sensor may have problems detecting transparent paper or some types of Non-HP paper. Try loading white HP paper in to the printer and check that the Line sensor detects it.
2. The Line Sensor is not calibrated correctly. Perform the Line Sensor Calibration. See Line Sensor Calibration on page 155.
3. The Line Sensor is damaged or faulty. Replace the Line Sensor. See Line Sensor on page 296.

Troubleshooting paper jams and printhead crashes

The failure modes "paper jam" and "head crash" are grouped together because in many cases a paper jam causes the paper to lift up into the Carriage path and cause a Printhead crash, thus causing many paper jam failures to be reported as head crashes.

1. Did the paper jam occur when loading paper?
   - If the client has had paper jams, it is common for pieces of paper to get stuck in the paper path. Clear the paper path.

NOTE: When clearing a paper jam, sometimes paper is stuck in the paper path. To clear this, you must lift the Media Lever and insert thicker paper into the paper path to push out the paper that is still stuck there.

2. Is the customer using non-HP paper?
   - The use of non-HP paper can easily be the cause of paper jams and head crashes (especially head crashes because HP paper is specially formulated to avoid cockle, one of the primary causes of head crashes). If the paper is not HP approved, advise the customer to use HP paper and check to see whether the problem is now solved.

Banding at variable extreme environmental conditions

Since the Accuracy Calibration has been done at normal environmental conditions, printing in extreme environmental conditions will cause banding because the advance of the Media Advance Roller does not correspond to the same conditions that the calibration was done in. To solve the problem, try the following:

Perform the Accuracy Calibration in the new environmental conditions (Refer to the User's Guide).

Worm marks on HP Coated paper with light area fills

Light bands (S-shaped) in Paper axis direction where light area fills are printed, causing unacceptable Image Quality defect.

- Print the Service Configuration Print and check whether the humidity level is very low (below 30%). Increasing humidity may help in reducing the severity of the problem.

NOTE: The paper is causing the problem and **not** the printer. Do not attempt to try to replace printer parts to solve this problem.

The basket was damaged during printer setup

1. There are three plastic parts that could break during printer installation and need replacing.
2. Check the parts table and graphics in Parts and Diagrams to identify what service parts you must order. See Printer Support on page 161.
3. Replace the component. See Bin Assembly on page 188.

Paper-handling troubleshooting

Roll paper

The Front Panel indicates that paper is misaligned or incorrectly positioned

- The roll may be loaded the wrong way. The paper should load over the roll toward you.
- Check that the paper is correctly loaded onto the spindle.
- The paper may be loaded at an angle. The right-hand edge must be aligned with the blue line on the Print Platen.
- Check that the Right Roll Support is properly attached and screwed to the printer.

The Rewinder, located on the Right Roll Support, should maintain proper back tension. If the Right Roll Support is misaligned or not properly attached to the printer, the Rewinder will not function properly.

To further diagnose problems with the Rewinder, see Rewinder Test on page 114.

Sheet paper

- The sheet must be loaded with the right-hand edge against the white line on the upper roll cover.
- The paper may be crumpled or warped or may have irregular edges.
- If hand-cut paper is used, the edges may not form a right-angle or they may be rough. If possible, hand-cut paper should not be used. Only purchased sheet paper should be used in the printer.
- If you have problems with paper jams, check that the Overdrive is not obstructed by bits of paper or using the Turn Drive Roller Service Utility. See Turn Drive Roller on page 130.

Check that the Right Roll Support is properly attached and screwed to the printer.

The Rewinder, located on the Right Roll Support, should maintain proper back tension. If the Right Roll Support is misaligned or not properly attached to the printer, the Rewinder will not function properly.

To further diagnose problems with the Rewinder, See Rewinder Test on page 114.

Print-quality troubleshooting

Print-quality troubleshooting actions

NOTE: For some print-quality problems, a Call Agent can try to troubleshoot the printer by requesting the Customer to perform certain actions. Using this process, most problems can resolved without the need of an on-site visit.

Use the Print Quality Troubleshooting Wizard to help customers with their print quality or color problems. For information about how to use the Print Quality Troubleshooting Wizard, see Print Quality Troubleshooting Wizard on page 30.

When faced with a Print Quality problem, perform the following actions in order to resolve the problem:

1. Printer Configuration:
   - Check that the paper type loaded corresponds to the paper type selected in the front panel and in the software. You can check the paper type selected by pressing the **View information** key on the Front Panel.
   - Make sure that the correct Print Quality settings are used for different types of print content. See Print-quality troubleshooting actions on page 6 for further information.
   - Dry time should be set to "Optimal".
2. Perform Printhead recovery (Main Menu/Image Quality Maintenance/Clean Printheads).
3. Paper:
   - Select the correct paper type through the front panel when loading it.
   - Make sure that HP or HP-approved paper is being used.
4. Perform the Printhead Alignment (Main Menu/Image Quality Maintenance/Align Printheads), using the same paper type with which you were experiencing unacceptable image quality, if feasible (some paper types are not suitable for Printhead Alignment).
5. Check whether the latest version of the firmware is installed. If not, install the latest firmware revision.

The Service Image Quality Diagnostic Print

What is the Service Image Quality Diagnostic Print?

The printer contains an internal Image Quality Test which helps you to diagnose the possible source of any image quality defects. The Service IQ Diagnostic Print is available in the following options:

1. Image Quality Service Best Plot. This plot helps you to diagnose in more detail the possible source of any image quality defects. It is accessible through the Service Utility Menu.

   The Image Quality Service Best Plot uses the Best Print Mode and is divided in to three parts as follows:
   - Diagnostic Part 1: Printhead Reliability Test. The purpose of this test is to identify which Printhead is faulty.
   - Diagnostic Part 2: Printhead Alignment Test. This test is designed to check any color-to-color and bi-directional misalignment the printer may have.
   - Diagnostic Part 3: Printheads and Paper Advance test. This test is designed to check whether the Printheads and the Media Advance Mechanism are working correctly.
2. Image Quality Service Normal Plot. This plot is the same as the Image Quality Service Best Plot but uses the Normal Print Mode.
3. Advanced Diagnostic Plot. These tests provide more information of the IQ defects that we could find in the Image Quality Service plot. For more information, see The Advanced Diagnostic Prints on page 12.

Considerations for Printing the Diagnostic Print

1. The IQ Diagnostic Print prints in A3 and B sizes so you must have paper loaded (roll or sheet) that is this size or larger.
2. Use the same type of paper that the customer was using when they found the image quality problem.
3. If the customer is using non-HP paper and after the Image Quality Test you still have the same image quality problems, change to genuine HP paper and repeat the Image Quality Test.

   If you do see problems with the Image Quality Test, continue with the Advanced Diagnostic procedures which will help you diagnose the problem.

Printing the Diagnostic Print

1. In the Service Utilities submenu, scroll to “Diagnostic Print” and press **OK.**

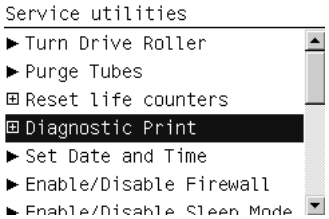

2. You will be given three options. Use the **Arrow** keys to make the selection and press the **OK** key to start printing the required Diagnostic Print or to enter the Advanced Diagnostics menu.

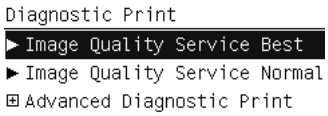

3. If you selected **Advanced Diagnostics Print** in the previous step, use the **Arrow** keys to make the required selection,and press the **Enter** key to start printing.

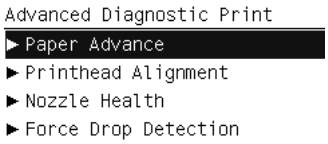

4. Make sure paper is loaded, the Media Lever is lowered and that the Ink System is correctly installed. Press the **OK** key to print the Diagnostic Print or press **Cancel** to exit without printing the Diagnostic Print.

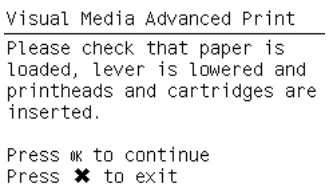

5. The selected Diagnostic Print will now be printed.

Reading the Diagnostic Print results

Diagnostic Part 1: Printhead Reliability

The Nozzle Print Test test is designed to check that the Printhead nozzles print correctly.

The nozzles check (top of the plot) is printed in a one-pass full swath mode. The diagnostics test prints out every single nozzle of each Printhead without applying an error hiding or alignment algorithm.

For each Printhead, you can see both the adjacent and the consecutive nozzles.

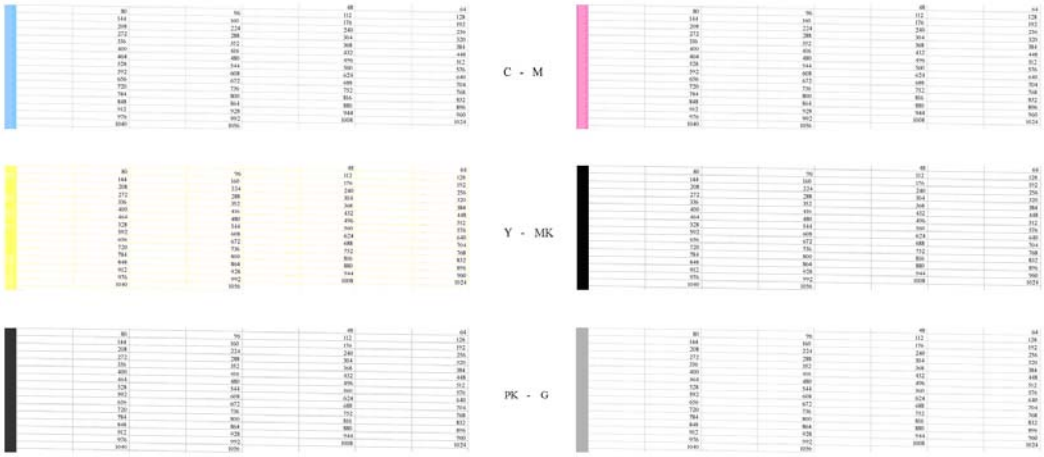

If any nozzles are not printing correctly they will be shown on the right of each Printhead Nozzle test. There is a series of numbered stepped diagonal lines. If one or more of the nozzles are clogged, malfunctioning or mis-positioned, you will see that the stepped lines are broken or misdirected in one or more places.

Below, the stepped lines highlighted in yellow are broken. When the line is completely broken, this means the nozzle is out.

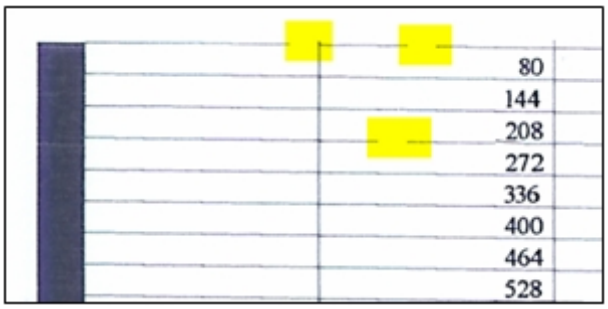

Below, the stepped lines highlighted in yellow are misdirected. When the line is misdirected, this means the nozzle is malfunctioning or out of position.

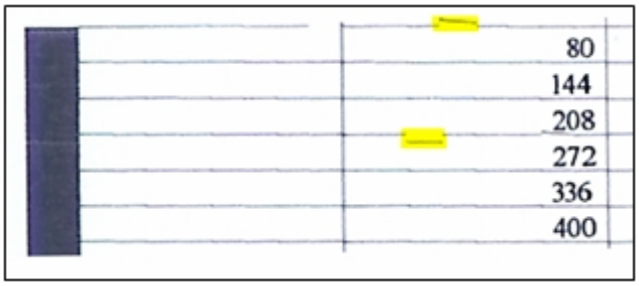

On the left of each Printhead Nozzle test, there is a series of horizontal straight lines. If one or more nozzles are misdirected there will be unequal spaces between the corresponding lines.

Corrective action

If the printer has nozzle defects, you can still get perfect print quality results. The printer can automatically compensate for nozzle defects, so there is no need to replace the Printhead.

The method of improving Nozzle Defects is to:

1. Recover the Printheads, using the Front Panel Main Menu/Image Quality Maintenance/Clean Printheads option.
2. Reprint the Printhead Nozzles Test Plot to check that the defective nozzles have been corrected.
3. If the problem continues, replace the defective Printhead.

Diagnostic Part 2: Printhead Alignment

This test is designed to check any color-to-color and bi-directional misalignment the printer may have.

1. If the printer is experiencing **horizontal** misalignment problems, the Alignment Test will show something like this:

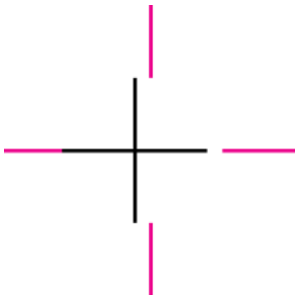

2. If the printer is experiencing **vertical** misalignment problems, the Alignment Test will show something like this:

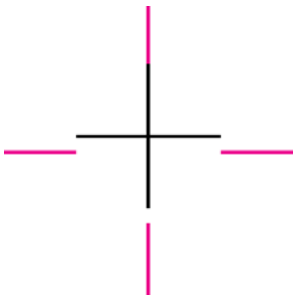

3. If the printer is experiencing **bi-directional** misalignment problems, the Alignment Test will show something like this:

Corrective action

Perform the Printhead Alignment (Main Menu/Image Quality Maintenance/Align Printheads), using the same paper type with which you were experiencing unacceptable image quality, if feasible (some paper types are not suitable for Printhead Alignment).

Diagnostic Part 3: Printheads & Paper Advance

This test is designed to check whether the Printheads and the Paper Advance Mechanism are working correctly. This part of the Image Quality Test should **not** be used to check for color consistency or accuracy.

Banding

If the printer is experiencing a banding problem, you will see repetitive horizontal bands within the printed image.

- Darker horizontal bands or lines repeated along the vertical band (from top to bottom at the same distance).
- Whiter horizontal bands or lines along the vertical band (from top to bottom at the same distance).

The plot is printed in Best or Normal mode (according to the menu option selected) with Error Hiding ON. The top band has 100% ink density patches while the bottom band has 50% ink density patches.

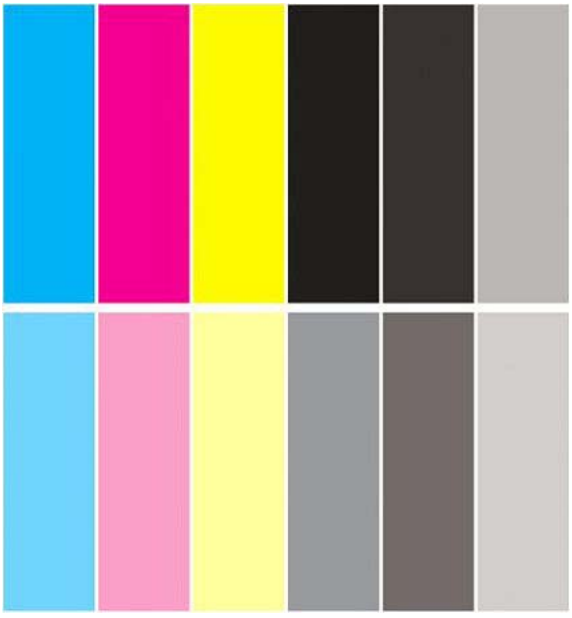

Troubleshooting Banding Problems

If banding **does not** occur in **all** the colors, then it is more than likely a Printhead problem. In this case, try the following:

1. Check that the appropriate print quality settings are being used (refer to the User's Guide for more information).
2. Recover the printheads using the option through the Front Panel (Main Menu/Image Quality Maintenance/Clean Printheads). Reprint the Diagnostic Print or the print file and if the problem persists, replace the faulty Printhead.

   If banding **does** occur in **all** the colors, then it is more than likely a Paper Advance problem:

   - If the bands are light, it means that the paper has advanced too much.
   - If the bands are dark, it means that the paper hasn't advanced enough.
   - In high quality modes, graininess in **all** colors can indicate problems either with alignment or Paper Advance.

Corrective action

In order to solve problems that result in banding, try the following

1. Check that the appropriate print quality settings are being used (refer to the User's Guide for more information).
2. Check that the loaded paper is the same type as selected in the printer. You can check the paper type selected through the Front Panel (Main Menu/Paper menu/View loaded paper).
3. If the customer is using low-quality paper, try recommending better-quality paper (preferably HP paper). Printer performance can only be guaranteed by using recommended papers.
4. Perform Paper Advance Calibration using the same type of paper that will be used for the final print (Main Menu/Image Quality Maintenance/Paper Advance Calibration/Calibrate Paper Advance).

   If there is white point banding in only one color band and the problem cannot be fixed using the Printhead recoveries, in some cases using the Force Drop Detection option can fix this issue.

No Printing Defects Found in the Diagnostic Print

If all the test patterns from the Diagnostic Print are correct and you still experience Image Quality problems, you can use the following procedures to resolve the problem.

- Reading the Advanced Diagnostic Print Results
- Printhead Alignment
- Nozzle Health
- Force Drop Detection

The Advanced Diagnostic Prints

What are the Advanced Diagnostic Prints?

These tests provide more information about the IQ defects found in the Image Quality Service plot.

The Advanced Diagnostic Print is divided into the following parts:

- Visual Media Advanced Diagnostic. Used to check advance reliability.
- Printhead Alignment Diagnostic. Used to check pen alignment reliability.
- Visual Nozzle health Diagnostic. Used to check nozzle health reliability.
- Force Drop Detection. Used to reset the nozzle health historic database and force new drop detection.

Printing the Advanced Diagnostics Print

1. In the Service Utilities submenu, scroll to “Diagnostic Print” and press **OK.**

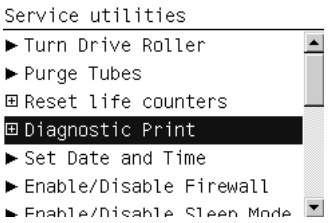

2. You will be given three options. Use the **Arrow** keys to select **Advanced Diagnostic Print**.

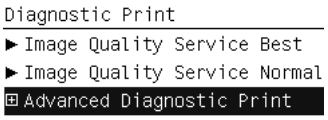

3. Use the **Arrow** keys to select the option you want, and press the **OK** key to start printing.

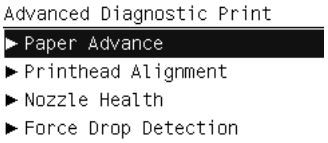

4. Make sure paper is loaded, the Media Lever is lowered and that the Ink System is correctly installed. Press the **OK** key to print the Diagnostic Print or press **Cancel** to exit without printing the Diagnostic Print.

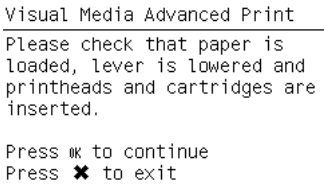

5. The selected Advanced Diagnostic Print will now be printed and, if necessary, automatically scanned.

Reading the Advanced Diagnostic Print results

Paper Advance

This plot helps you to visually check any alignment problems of the printer. You use it to precisely measure the paper advance error with a one dot row accuracy, and to check the stability of the paper advance.

The whitest vertical line should be positioned in the 0 offset column with minor variations between +2 and -2 columns. If the offset is not positioned on the 0 column or between +2 and -2 columns and the whitest vertical varies greatly, the printer requires Paper Advance Calibration (Main Menu/Image Quality Maintenance/Paper Advance Calibration/Calibrate Paper Advance).

NOTE: It is very important to check that the loaded paper is the same paper type as selected in the front panel. You can check the paper type selected through the Front Panel (Main Menu/Paper menu/ View loaded paper). The wrong type of paper selected will produce an offset error in the Paper Advance.

The following plot shows correct paper advance, there is a straight white line positioned close to the 0 column for the majority of the points.

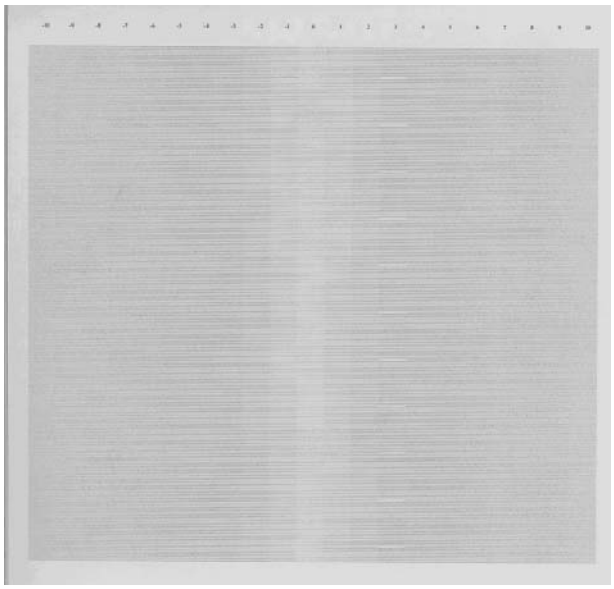

The following plot shows a bad paper advance, there is a straight white line positioned close to the -6 column, instead of the 0 column for the majority of the points.

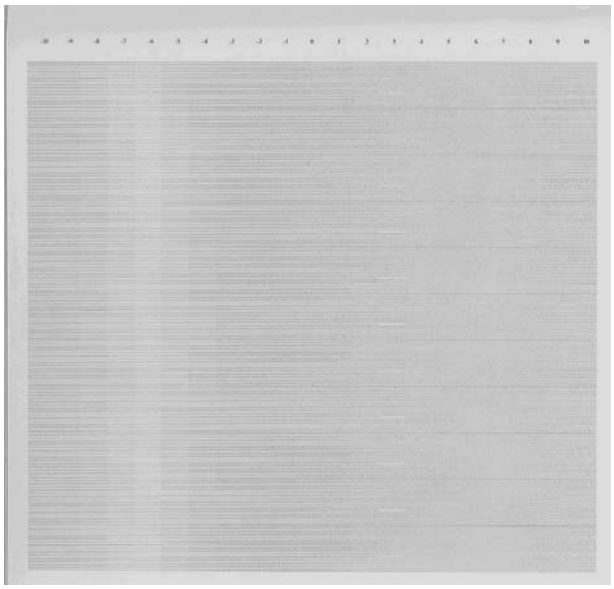

Corrective action

To fix Paper Advance problems, try the following:

1. Check the Paper Advance Calibration Status. This can be done by going to Main Menu/Paper/View Loaded Paper. At the bottom, the Front Panel displays the Paper Advance Calibration status. There are three status messages:

   - **DEFAULT.** The paper loaded is recognized as HP paper, which is already optimized and calibrated for the printer. Do not calibrate the Paper Advance for this paper.
   - **RECOMMENDED.** The paper loaded is **not** recognized as HP paper, and Paper Advance values have **not** been customized for this paper type. In this case, calibrate the Paper Advance from the user menu.
   - **OK.** This indicates that the paper loaded has been calibrated before. If the printer continues to have banding and graininess problems, calibrate the Paper Advance from the user menu.

   NOTE: Whenever the printer's firmware is upgraded, the paper advance calibration values will be reset to factory default.

2. To calibrate the Paper Advance from the user menu, go to Main Menu/Image Quality Maintenance/Paper Advance Calibration/**Calibrate Paper Advance.**

NOTE: It is very important to check that the loaded paper is the same paper type as selected in the front panel. You can check the paper type selected through the Front Panel (Main Menu/Paper menu/View loaded paper). The wrong type of paper selected will produce an offset error in the Paper Advance.

NOTE: Some paper types are not suitable for Paper Advance Calibration. Do **not** use colored papers or transparent materials such as translucent bond, clear film, matte film, tracing paper, or vellum.

Paper Advance calibration from the user menu will only calibrate the Paper Advance for the paper type loaded in the printer at that moment.

3. If Calibrate Paper Advance has mostly solved the problem, try Adjust Paper Advance to fine tune the Paper Advance (Main Menu/Image Quality Maintenance/Paper Advance Calibration/**Adjust Paper Advance**).

   Select the percentage of change from -100% to 100%. To correct light banding, decrease the percentage. To correct dark banding, increase the percentage.

4. The Paper Advance calibration from the service menu will calibrate the Paper Advance for **all** paper types. This action is recommended when:

   - The Paper Advance calibration from the user menu does **not** solve the problem.
   - The Paper Advance problems affect **all** paper types.

   The procedure for Paper Advance Calibration from the service menu is documented in Chapter 5, Service Calibrations. See Paper Advance Calibration on page 148.

Printhead Alignment

NOTE: To ensure you obtain meaningful results, use the same type of paper that the customer was using when they encountered the image quality problem.

This plot helps you to visually check any alignment problems of the printer. You use it to precisely measure the alignment error with a 3 dot row accuracy. For the printer to be considered correctly aligned, the results must be within ±3 dot row.

The illustration shows the complete Printhead Alignment that identifies each of the specific alignment test results covered.

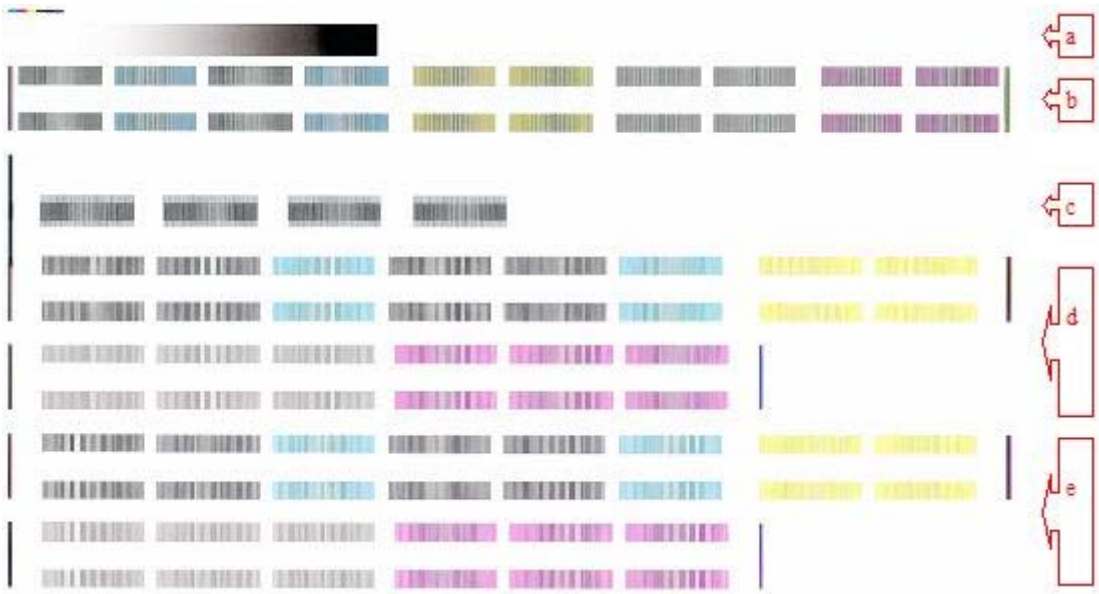

The Printhead Alignment Diagnostic print shows the following diagnostic test results:

a Line Sensor Calibration

b Pen to Pen Align

c Carriage thetaZ

d Bidirectional align (high

e Bidirectional align (Low)

For tests **a**, **b**, and **c**, the order of the color band is:

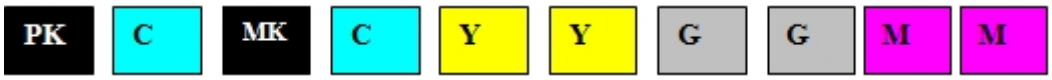

For tests **e** and **f**, the order of the color band is:

Once the printer has correctly printed and scanned the Printhead Alignment Diagnostic print, the Front Panel displays the results. The top row displays the printhead, and the left column displays the test.

The results are separated onto two screens. Use the **Arrow** keys to display the second results screen.

```
Printhead Alignment
              Y    M    C
P2P:        1.1  0.8 -0.7
Bid Low:    4.2 -1.5 -1.6
Bid High: -2.3 -1.1  1.5
Theta Z:    1.2 -0.8 -0.2

Press UP/DOWN to scroll
or OK to exit.
```

```
Printhead Alignment
              G    PK   MK
P2P:       -0.8 -1.1   NA
Bid Low:   -0.8  1.1  1.2
Bid High:   1.2  1.1  1.0
Theta Z:    0.3 -0.7  0.3
Skew:                -0.2
Press UP/DOWN to scroll
or OK to exit.
```

Any printhead with a test result containing a number that is not within the ±3 dot row range is misaligned.

NOTE: The mK printhead is used as a reference to test the other printheads. If all the printheads fail the Pen to Pen tests, it is the mK printhead that is misaligned.

Reading the Printhead Alignment Diagnostic Print

The following plot shows correct printhead alignment for all patterns. The clear band is in the center of the pattern.

The following plot shows bad printhead alignment. The clear band is not in the center of the pattern.

Corrective action

- If any of the printheads are misaligned beyond the ±3 dot row range, perform a Printhead Alignment.
- If a Printhead Alignment does not correct the problem, replace the bad printhead.

NOTE: If the customer is using non-HP paper and after the Image Quality Test you still have the same image quality problems, change to genuine HP paper and repeat the Image Quality Test. The best alignment calibration is obtained using HP Photo Paper.

Nozzle Health

The print contains three separate parts.

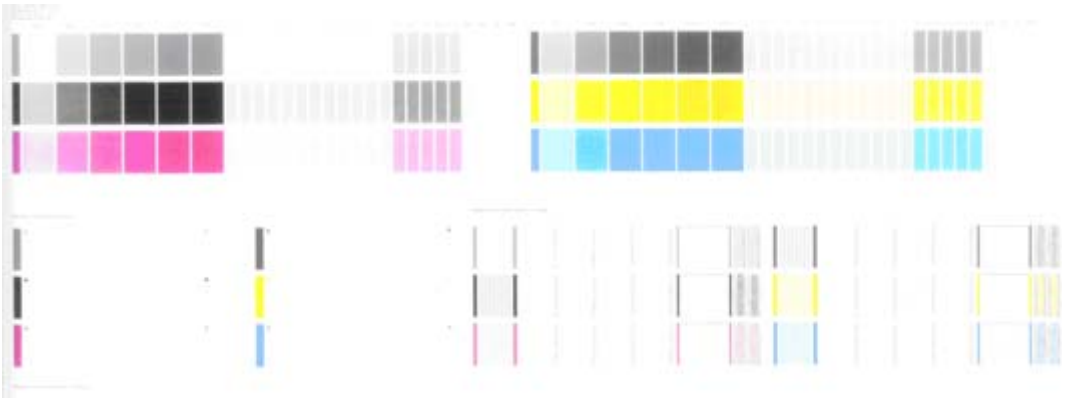

a The Variable Frequency Nozzle health plot with odd/even nozzles separation. This is used to detect misdirected nozzles, weak nozzles, or nozzles not working correctly at all frequencies.

b Inspector measuring tool test plot.

NOTE: Test b should **not** be used by Service Engineers.

c Nozzle Print Test which is also part of the Image Quality Service Plot. This test is designed to check that the Printhead nozzles print correctly. The test prints out every single nozzle of each Printhead. No error hiding or Printhead Alignment algorithm is applied. For each Printhead, you can see both the adjacent and the consecutive nozzles.

This is what you would see in the **Nozzle Print Test** part if there are nozzles not printing correctly:

1. On the right of each Printhead Nozzle test, there is a series of numbered stepped diagonal lines. If one or more of the nozzles are malfunctioning or mis-positioned, you will see that the stepped lines are broken or misdirected in one or more places.
2. On the left of each Printhead Nozzle test, there is a series of horizontal straight lines. If one or more nozzles are misdirected there will be unequal spaces between the corresponding lines.

Corrective action for Nozzle Defects

If the printer has nozzle defects, it does not mean that you will not get perfect print quality results. The printer has automatic procedures to hide many nozzle defects.

1. Recover the Printheads using the option through the Front Panel (Main menu/Image quality maintenance/clean printheads).
2. Reprint the Nozzle Print test to check that the defective nozzles have been corrected.
3. If the problem continues, replace the defective Printhead.

Force Drop Detection

If the **Nozzle Print Test** plot has persistent white point banding in only one color that cannot be fixed with a printhead recovery, you can use this option to resolve the problem by resetting the nozzle health database so that all nozzles are assumed to be correct.

Once the nozzle health database has been reset, drop detection is forced.

The normal cause of this white point banding in a single color is the incorrect detection of failed nozzles by the drop detector.

Perform the test as follows.

1. Select **Advanced Diagnostic Print**.

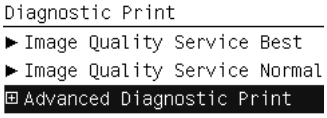

2. Select **Force Drop Detection**.

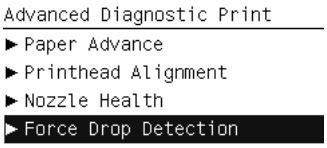

3. Make sure the Media Lever is lowered and the ink system ready, then press **OK**.

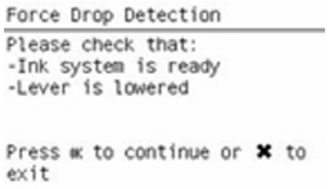

4. The printer runs the drop detection.

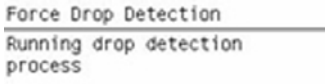

5. Press **OK** to end the test and return to the menu.

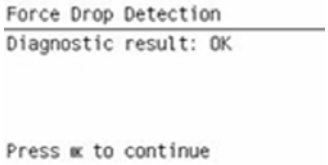

Troubleshooting print-quality problems

General advice

1. To achieve the best performance from the printer, only genuine HP accessories and supplies should be used.
2. Make sure that the **paper type** selected in the Front Panel is the same as the paper type loaded into the printer.
3. Make sure to use the most appropriate print quality settings for your purposes. A lower print quality is likely to be seen if the print quality slider has been moved to the **Speed** end of the scale, or the custom quality level set to **Fast**.
4. Check that the environmental conditions (temperature, humidity) are within the temperature/ humidity range as specified for the printer (refer to the User's Guide for more information).
5. Check that the ink cartridges and printheads have not exceeded their expiration dates.

Horizontal lines across the image (banding)

When you look at the image you have printed, there are horizontal lines across the print. Here are two examples of what you might see if you have this problem:

Corrective action

1. Check that the paper type loaded corresponds to the paper type selected in the front panel and in the software. You can check the paper type selected by pressing the **View information** key on the Front Panel.
2. Check that the appropriate print quality settings are being used (refer to the *User's Guide* for more information) and reprint the image. In some cases print quality problems can be resolved by selecting a higher print quality level.
3. Print the Service Image Diagnostics Print, and clean any printheads that need cleaning. Reprint the job in case the problem has been solved.
4. Check the paper advance calibration status. If the status is PENDING, calibrate the paper advance: at the Front Panel, select the Image Quality Maintenance icon, then **Paper advance calibration** > **Calibrate paper advance**.
5. After calibration, reprint the job.
6. Try again with a new roll of paper.
7. Watch the printer carriage when it reaches the end of its swath. If there is an unexpected delay, this may cause the banding.

   If this is the case, the following corrective measures can be taken:

   - Do not use the computer while printing. Close applications that use a large amount of computer resources.
   - Convert the file to PDF. Formats like PDF require less resources to print, which may solve your banding problem.

   This delay is possibly the result of the following:

   - The user is performing tasks with other applications while printing (particularly image processing applications). These applications are using too many computer resources, and the computer cannot effectively process the print job.
   - The file to be printed is complex, and the computer does not have the capacity to print such complex files.
   - If printing over a LAN, it is possible that the LAN is too slow to meet the requirements of the print job.

Lines are missing, too thin, or too thick

Shown below is an example of what you might see if you have this problem:

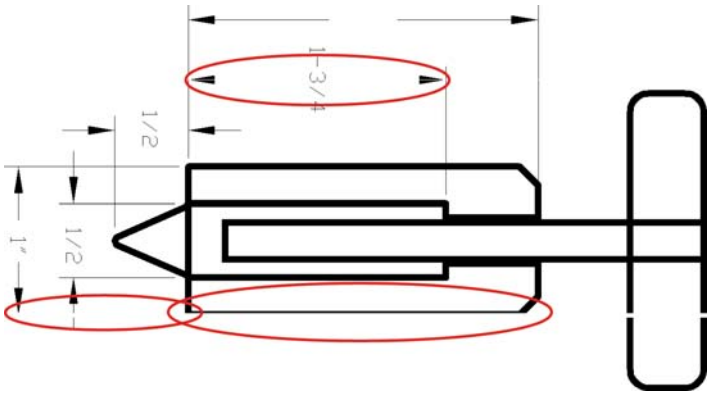

Corrective action

1. Check that the paper type loaded corresponds to the paper type selected in the front panel and in the software. You can check the paper type selected by pressing the **View information** key on the Front Panel.
2. Check that the appropriate print quality settings are being used (refer to the User's Guide for more information). Select the custom print quality options in the Print dialog, and if you are using best quality and glossy paper, try turning on the Maximum detail option. Reprint the job in case the problem has been solved.
3. If the resolution of the image is greater than the printing resolution, a loss of line quality may be seen. You can find the Max. Application Resolution option in the Windows driver dialog's Advanced tab, under Document Options > Printer Features. Reprint the job in case the problem has been solved.
4. Check the Printhead alignment status. If the status is PENDING, perform the Printhead Alignment (Main Menu/Image Quality Maintenance/Align Printheads). After alignment reprint the job.
5. Check the paper advance calibration status. If the status is PENDING, calibrate the paper advance: at the Front Panel, select the Image Quality Maintenance icon, then **Paper advance calibration** > **Calibrate paper advance**. After calibration, reprint the job.
6. Use Part 3 of the Image Quality Diagnostic Print, check if there are a significant amount of nozzles out in the color that is **actually causing** the problem (if see you a problem with the Black color in the customer print, then only check the Black printhead in the Image Quality Diagnostic Print). If there is a significant amount of nozzles out then replace the defective Printhead.

Problems with stepped lines

When you look at the image you have printed there are **'stepped lines'** in the borders of arrows and diagonal lines. The lines should be straight with no stepping.

Shown below is an example of what you might see if you have problems with Stepped Lines:

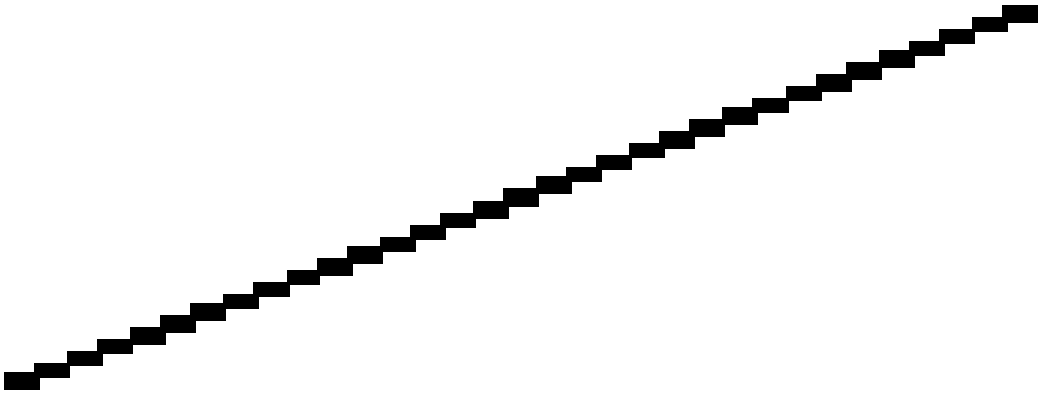

Corrective action

1. The problems may be inherent in the image that you are trying to print. Try to improve the image with the **application** that generated the file.
2. Check that the appropriate print quality settings are being used (refer to the User's Guide for more information).
3. Select the custom print quality options in your Print dialog, and if you are using Glossy paper and BEST quality, turn on the **Maximum Detail** option.
4. Change the image rendering resolution to 300 dpi (only in EconoMode Printmode) or 600 dpi depending on the printing needs. You can find the Max. Application Resolution option in the Windows driver dialog's Advanced tab, under Document Options > Printer Features.

Lines are printed double or in wrong colors

This problem can have various visible symptoms, as shown below:

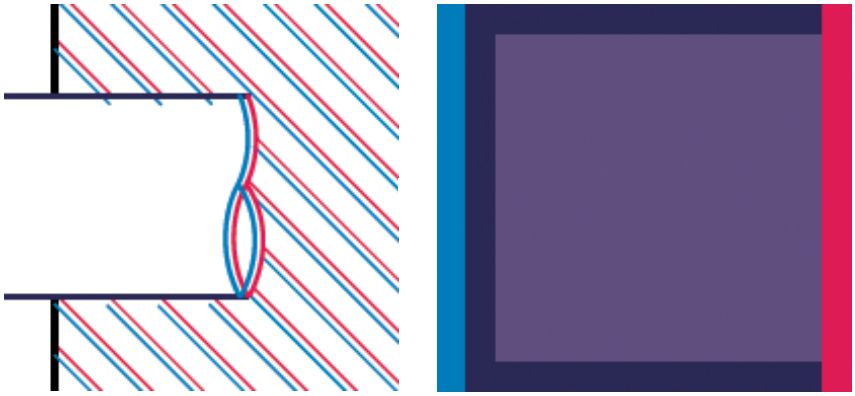

Corrective action

▲ Reseat the printheads by removing them and then reinserting them.

NOTE: As you reseat the printheads, the printer will automatically align the printheads. It is important that the alignment is completed properly.

Lines are discontinuous

If the lines are broken in the following way:

1. Check that the appropriate print quality settings are being used (refer to the User's Guide for more information).
2. Reseat the printheads by removing them and then reinserting them.

NOTE: As you reseat the printheads, the printer will automatically align the printheads. It is important that the alignment is completed properly.

Lines are blurred (ink bleeds from lines)

This problem is often caused by the ink soaking into the paper, making the lines blurred and fuzzy. This could be because of the humidity in the air.

Corrective action

1. Check that the environmental conditions (temperature, humidity) are suitable for high-quality printing.
2. Make sure that the **paper type** selected in the Front Panel is the same as the paper type loaded into the printer.
3. Try using a heavier paper type. When printing dense colors, it is recommended to use HP Heavyweight Coated Paper or HP Super Heavyweight Coated Paper.
4. If glossy paper is being used, try changing to a different type of glossy paper.
5. Align the printheads. See Image Quality Maintenance Procedure on page 43.
6. Try rotating the image.

Problems with graininess

Shown below is an example of what you might see if you have problems with graininess:

Corrective action

1. Check that the paper type loaded corresponds to the paper type selected in the front panel and in the software. You can check the paper type selected by pressing the **View information** key on the Front Panel.
2. Check that printing is on the correct side of the paper.
3. Check that the appropriate print-quality settings are being used (refer to the *User's Guide* for more information). In many cases, you can correct grainy printing by raising the print-quality level. Reprint the job in case the problem has been solved.
4. Reseat the printheads by removing and then reinserting them.

> **NOTE:** As you reseat the printheads, the printer will automatically align them. It is important that the alignment is completed properly.

5. Check the paper advance calibration status. If the status is PENDING, calibrate the paper advance: at the Front Panel, select the Image Quality Maintenance icon, then **Paper advance calibration** > **Calibrate paper advance**.
6. After paper advance calibration, reprint the job.
7. If there is only a strip of grain at the top of the job, try leaving a white margin of 5 cm before the job, or load a new roll of paper (with less paper curl).

Paper is not flat

If the paper does not lie flat when it comes out of the printer, but has shallow waves in it, you are likely to see visible defects in the printed image, such as vertical stripes. This can happen when you use thin paper that becomes saturated with ink.

Shown below is an example of what you might see if you have problems with the paper not being flat:

Corrective action

1. Check that the paper type loaded corresponds to the paper type selected in the front panel and in the software. You can check the paper type selected by pressing the **View information** key on the Front Panel.
2. Try using a heavier paper type. When printing dense colors, it is recommended to use HP Heavyweight Coated Paper or HP Super Heavyweight Coated Paper.

Ink marks on the paper

This problem may occur for different reasons.

Horizontal smears on the front of coated paper

If a lot of ink is used on plain or coated paper, the paper absorbs the ink quickly and expands. As the printheads move over the paper, the printheads may come into contact with the paper and smear the printed image. This problem is normally seen only on cut sheets of paper (not on roll paper).

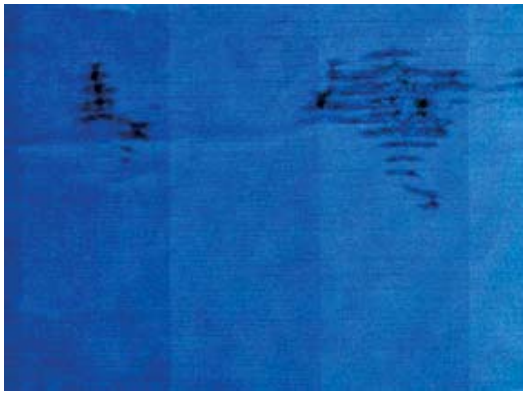

Corrective action

1. Check that the paper type loaded corresponds to the paper type selected in the front panel and in the software. You can check the paper type selected by pressing the **View information** key on the Front Panel.
2. Use a recommended paper type and the correct print settings.
3. If using sheet paper, try rotating the sheet 90 degrees. The orientation of the paper fibers may affect performance.

4. Try using a heavier paper type. When printing dense colors, it is recommended to use HP Heavyweight Coated Paper or HP Super Heavyweight Coated Paper.
5. Try to increase the margins by relocating the image to the center of the page with the software application being used.

Ink marks on the back of the paper

This can happen after a lot of border less printing, especially with non-standard paper sizes. Ink residues on the platen are likely to mark the back of the paper.

Corrective action

- Clean the platen with a soft cloth. Clean each rib separately without touching the foam between the ribs.

Problems with the edges of objects

Stepped or not sharp

The edges of objects or lines appear to be poorly defined or lighter in density than expected.

Corrective action

- If the print quality slider has already been set to **Quality** in the Print dialog, select the custom print quality options, and try setting the quality level to **Normal** (refer to the User's Guide for more information).

Darker than expected

The edges of objects seem darker than expected.

Corrective action

- If the print quality slider has already been set to **Quality** in the Print dialog, select the custom print quality options, and try setting the quality level to **Normal.**

Black and white prints do not look neutral

Consider printing in grayscale (color options submenu inside the printing preference menu). See the *User's Guide* for more information.

Horizontal lines at the end of a cut sheet print

There is a type of defect that only affects the end of a print, within approximately 30 mm of the trailing edge of the paper. Some very thin horizontal lines may be seen across the print.

Corrective action

1. Print the Service Image Diagnostics Print, and clean any printheads that need cleaning. Reprint the job in case the problem has been solved.
2. Try printing with roll paper.
3. Try using larger margins around the image.

Vertical lines of different colors

The print has vertical bands of different colors along it.

Corrective action

1. Try using a heavier paper type. When printing dense colors, it is recommended to use HP Heavyweight Coated Paper or HP Super Heavyweight Coated Paper.
2. Use higher print quality settings (refer to the User's Guide for more information).

Vertical marks on the print (T1200 series only)

The print has vertical marks caused by the roll cover arm pinches. These marks may be particularly visible in prints with black area fills on some types of glossy papers.

Corrective action

1. Try using a different glossy paper.
2. Load the roll on the upper spindle and disable the roll cover (only the upper roll cover can be disabled). See Disable Upper Roll Cover (T1200 series only) on page 144.

White spots on the print

White spots are seen on the print. This is probably due to paper fibers, dust, or loose coating material.

Corrective action

1. Clean the paper manually with a brush before printing, to remove any loose fibers or particles.
2. Always keep the cover of the printer closed.
3. Protect paper rolls and sheets by storing them in bags or boxes.

Problems with color accuracy

Corrective action

1. Ensure that the paper type being used has been color calibrated, which will give color consistency from print to print, and from printer to printer.
2. Check that printing is on the correct side of the paper.
3. Check that the appropriate print quality settings are being used (refer to the User's Guide for more information). Reprint the job in case the problem has been solved.
4. If the problem consists of color differences between your print and your monitor, please follow the instructions in the "How to calibrate your monitor" section of the HP Color Center. At this point, you may wish to reprint your job in case the problem has been solved.
5. Select suitable options in the application (refer to the User's Guide for more information).
6. Print the Service Image Diagnostics Print, and clean any printheads that need cleaning. Reprint the job in case the problem has been solved.

Color accuracy using EPS or PDF images in page layout applications

Page layout applications such as Adobe InDesign and QuarkXPress do not support color management of EPS, PDF, or grayscale files.

If these types of files have to be used, try to ensure that the EPS, PDF, or grayscale images are already in the same color space that is intended to be used later on in Adobe InDesign or QuarkXPress. For instance, if the final objective is to print the job in a press that follows the SWOP standard, at the time of creating the EPS, PDF or grayscale the image should be converted into SWOP.

Output only contains a partial print

If the output that was expected only contains a partial image, then try the following to resolve the problem:

1. Was the **Cancel** key pressed before all the data was received by the printer? If so, send the file again and make sure that the **Cancel** key is not pressed.
2. The **I/O Timeout** setting may be too short. Increase the I/O timeout setting (Setup Menu/I/O Setup/IO Timeout) and then send the file again.
3. There might be a communications problem between the printer and computer. Check the USB or network cable between the computer and the printer to make sure it is not damaged and is connected correctly.

4. Make sure that the software settings are correct for the current page size (e.g. long-axis prints).
5. If network software is being used, make sure it has not timed out.

Problems with image clipping

This normally indicates a discrepancy between the actual printable area on the loaded paper and the printable area as understood by the software. This kind of problem can often be identified before printing by previewing the print.

- Check the actual printable area for the paper size that is loaded. printable area = paper size – margins
- Check what the software understands to be the printable area (which it may call “printing area” or “imageable area”). For example, some software applications assume standard printable areas that are larger than those used in this printer.
- If a custom page size with very narrow margins has been defined, the printer may impose its own minimal margins, clipping the image slightly. Consider using a larger paper size, or border less printing.
- If the image contains its own margins, it may be possible to print it successfully by using the Clip Contents by Margins option.
- If a very long image needs to be printed on a roll, check that the software is capable of printing an image of that size.
- The page may have been rotated from portrait to landscape on a paper size that is not wide enough.
- If necessary, change the printable area in the software.
- If necessary, reduce the size of the image or document in your software application, so it fits between the margins

Another possible explanation

Some applications, such as Adobe Photoshop, Adobe Illustrator, and CorelDRAW, use an internal 16-bit coordinate system which means that they cannot handle an image of more than 32,768 pixels. If you try to print an image larger than this from these applications, the bottom of the image will be clipped. In this case, the only way to print the whole image is to reduce the resolution so that the whole image requires fewer than 32,768 pixels. The HP-GL/2 printer driver contains an option called **Compatibility with 16-bit applications**, which can be used to reduce the resolution of such images automatically. This option can be found option in the Advanced tab, under Document Options > Printer Features.

Some objects are missing from the printed image

Large quantities of data may be necessary to print a high-quality large-format print job, and in some specific workflow there may be issues that can lead to some objects missing from the output.

Corrective action

- In the Advanced tab, select Document options, Printer features, and set Send job as bitmap to Enabled (HP-GL/2 driver only).
- In the Advanced tab, select Document options, Printer features, and set 16-bit App. Compatibility to Enabled.
- In the Advanced tab, select Document options, Printer features, and set Max. Application resolution to 300.

The above settings are mentioned for troubleshooting purposes and may adversely affect the final output quality or the time necessary to generate the print job. Therefore, they should be restored to their default values if they do not help to solve the problem.

When working under Mac OS, the above settings are not available. Instead, try reducing the resolution of bitmap images in the application software being used.

A PDF file is clipped or objects are missing

In older versions of Adobe Acrobat or Adobe Reader, large PDF files could be clipped or lose some objects when printing with the HP-GL/2 driver at high resolution. Upgrade the Adobe Acrobat or Adobe Reader software to the latest version. From version 7 onwards, these problems should be solved.

Print Quality Troubleshooting Wizard

Here we describe the main guidelines to follow when troubleshooting print-quality and/or color issues.

The Print Quality (PQ) troubleshooting Wizard is a set of processes and corrective actions that the customer can trigger in the printer whenever the print quality of the printer does not meet their expectations.

Some of these corrective actions that the customer can perform to enhance the print and/or color quality are: printhead cleaning, paper advance calibration, printhead alignment, and color calibration.

The main benefits of this Print Quality Troubleshooting Wizard tool are that it creates a better customer experience, solving customer PQ issues fast, efficiently, and with a minimum cost for them and also for HP Support.

Customers can perform PQ/color troubleshooting through the Printer Utility (PU), the Embedded Web Server (EWS) or by following the steps described in the User's Manual or the HP Knowledge Center.

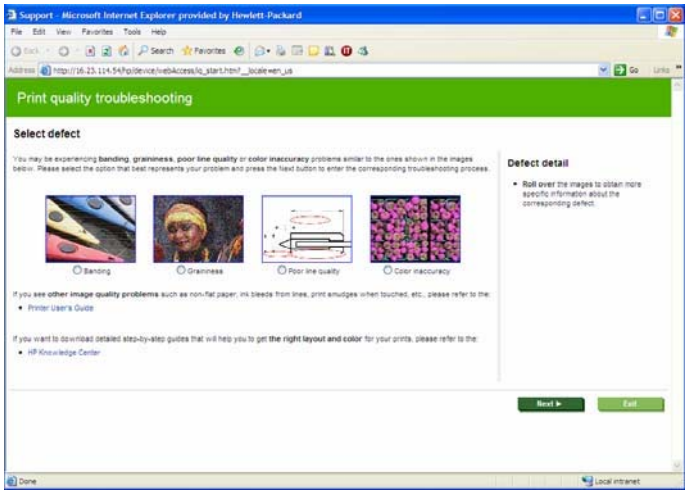

When to use the Print Quality troubleshooting tool:

The Print Quality Troubleshooting Wizard can help customers solve their PQ/color problems without the need to call to HP Support. Some of the problems for which it can help are the following:

- Troubleshooting area fill uniformity issues such as:
  - – Horizontal lines across the image (banding)
  - – The entire image is blurry or grainy (graininess)
- Troubleshooting line and text quality issues such as:
  - – Lines are too thick, too thin, or missing
  - – Lines appear stepped or jagged
  - – Lines print double or in the wrong colors
  - – Lines are discontinuous
  - – Lines are blurred
- Troubleshooting color issues such as:
  - – Colors are inaccurate
- Troubleshooting printhead reliability issues

Corrective actions a customer can perform:

The corrective actions on the printer's systems that the customer can perform to enhanced the print and/or color quality are:

- **Clean Printheads** is recommended only if the customer is experiencing problems with print quality where we know that printhead cleaning will help.
- **Calibrate Paper Advance** is used to adjust the printer's parameters for use with different paper types. This only affects the physical movement of paper and does not affect the color calibration profiles.
- **Align Printheads** is recommended only if the customer is experiencing problems with print quality where we know that proper printhead alignment will help (i.e. graininess).
- **Calibrate Color** is recommended only if the customer is experiencing problems with color print quality where we know that proper color calibration with help (i.e. color accuracy).

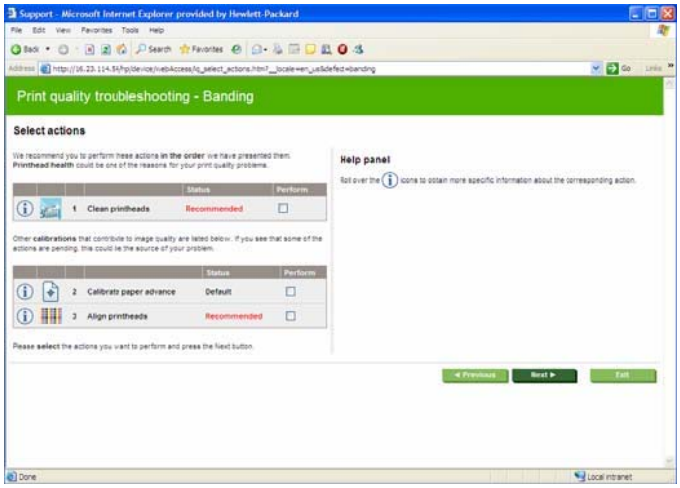

How to start the Print Quality Troubleshooting Wizard

1. From the HP Printer Utility under Windows: go to the **Support** tab, and select **Print quality troubleshooting**.

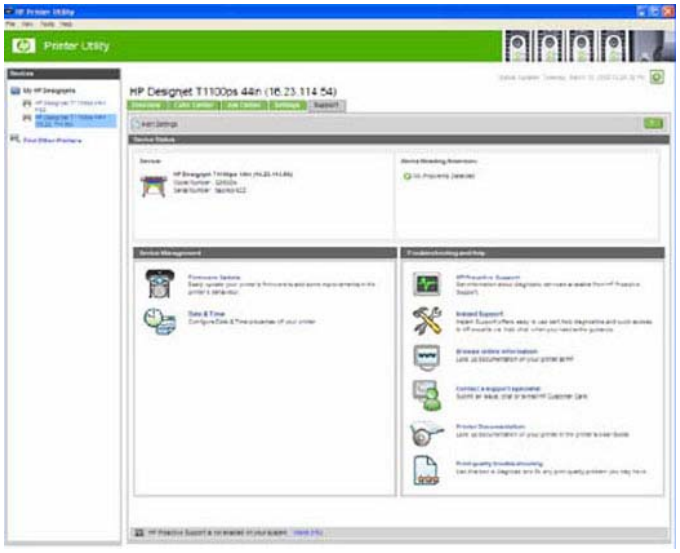

2. From the Embedded Web Server: go to the **Support** tab, then select **Print quality troubleshooting**.

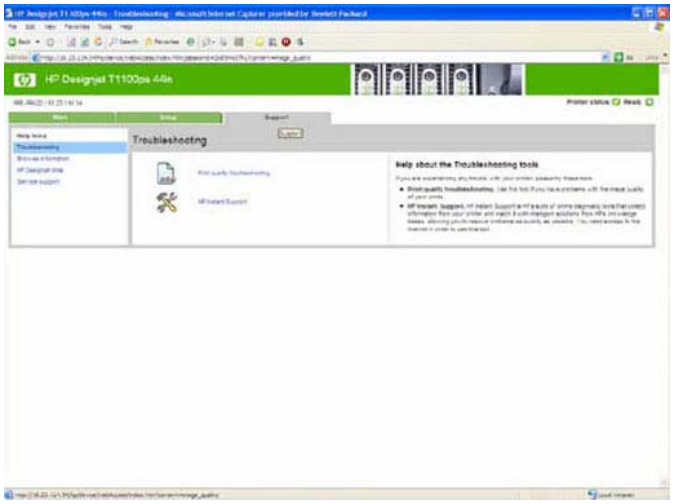

For Mac OS

1. From the HP Printer Utility under Mac OS: select Support, and then Print quality troubleshooting.
2. From the Mac OS Print dialog: go to the Services panel, select Device Maintenance, then select Print quality troubleshooting from the list of maintenance tasks.

Ink-supplies troubleshooting

- Introduction to ink supplies
- Ink cartridge levels, information and replacement
- Printhead information, replacement and alignment
- Ink cartridge and printhead status messages

- Solving ink-supply problems
- Maintaining and cleaning the printheads

Introduction to ink supplies

Introduction to ink supplies

What are ink supplies?

For each of the ink colors used in the printer, there are two components, the Printhead and Ink Cartridge. These components are called Ink Supplies.

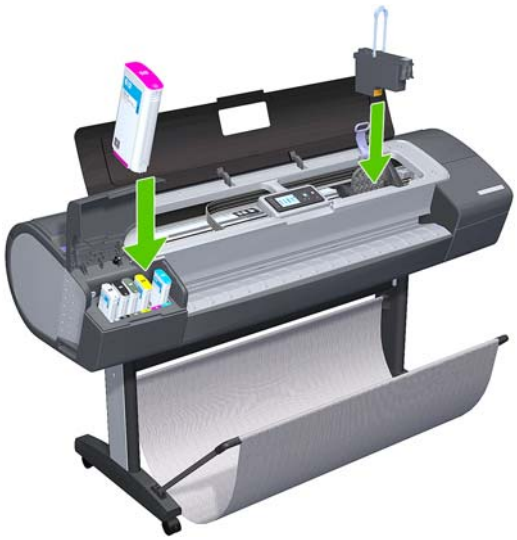

Ink cartridges

The printer's six Ink Cartridges provide matte black, magenta, yeloow, cyan, gray and photo black ink to the Printheads. The color Ink Cartridges supplied with the printer have a capacity of 69ml but optional 130 ml are also available.

All these Ink cartridges are physically the same size. Only the internal capacity varies.

The Ink Cartridges for the T printer series require no maintenance or cleaning. As long as each Ink Cartridge is inserted correctly into its slot, the ink will flow to the Printheads. Because the Printheads control the amount of ink transferred to the page, you will continue to see high-quality printing results even when the ink levels are getting low.

The front panel displays the status of the Ink Cartridge. Using the front panel, detailed information can be checked on the Ink Cartridges.

Table 1-2 Available Ink Cartridges

Ink cartridge	Part number
HP 72 69 ml Photo Black Ink Cartridge	C9397A
HP 72 69 ml Cyan Ink Cartridge	C9398A
HP 72 69 ml Magenta Ink Cartridge	C9399A
HP 72 69 ml Yellow Ink Cartridge	C9400A
HP 72 69 ml Gray Ink Cartridge	C9401A
HP 72 130 ml Matte Black Ink Cartridge	C9403A
HP 72 130 ml Photo Black Ink Cartridge	C9370A
HP 72 130 ml Cyan Ink Cartridge	C9371A
HP 72 130 ml Magenta Ink Cartridge	C9372A
HP 72 130 ml Yellow Ink Cartridge	C9373A
HP 72 130 ml Gray Ink Cartridge	C9374A
HP 726 300 ml Matte Black Ink Cartridge (T1200 series only)	CH575A

Printheads

The Printheads are extremely durable and do not need to be replaced every time an Ink Cartridge is replaced. They are independent of the Ink Cartridges and will continue giving excellent image-quality results even if the Ink Cartridges are low on ink.

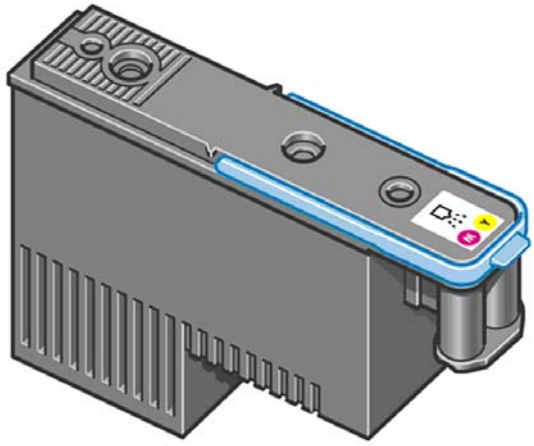

Table 1-3 Available Printheads

	Printer Model	Part number
HP 72 Gray & Photo Black Printhead	All	C9380A
HP 72 Magenta & Cyan Printhead		C9383A
HP 72 Matte Black & Yellow Printhead		C9384A

General information about the ink supplies

For optimum results from the printer and modular ink delivery system always follow these guidelines when handling the ink supplies:

- Always install the Ink Cartridges and Printheads before the expiration date, which is on the packaging.
- Install Ink Cartridges and Printheads in their color-coded slots.
- Follow the instructions on the front panel of the printer during installation.
- Avoid unnecessary removal of the Ink Cartridges and Printheads.
- When turning off the printer always use the Power key on the front panel. The Printheads are then stored correctly which prevents them from drying out.
- The Ink Cartridges should never be removed while the printer is printing. They should only be removed when the printer is ready for you to replace them. The front panel will guide you through the removal and installation procedure.

General precautions when handling ink supplies

Use the following precautions when handling Ink Supplies:

NOTE: Do not touch, wipe or attempt to clean the printhead nozzles. This can damage the printhead.

- Handle the ink supplies with care. In particular the Printhead, which is a high precision device and must be handled carefully.
- Do not touch the Printhead nozzles.
- Do not put the Printhead down on the nozzles.
- Do not be rough when handling the Printheads. Always set them down gently
- Do not drop the Printheads.
- Proper handling will assure optimum performance throughout the Printhead life.
- Do not touch the end of the Ink Cartridge which is inserted into the printer as there may be a small amount of ink on the connection.
- Avoid storing partially used Ink Cartridges on their ends.

When should you replace the ink supplies?

When to change the ink supplies is mostly determined by you with guidance from the front panel. In conjunction with the messages displayed in the front panel and the message explanations in this chapter, you will be able to choose for yourself when is the right time to change the ink supplies.

The printer will also display the ink level and will tell you when the ink supply is low on ink. This means you have constantly updated information about the ink supplies.

Ink cartridge levels, information and replacement

Ink cartridge levels

The front panel displays Ink Levels shown as level bars. These bars represent how much ink is remaining in the Ink Cartridges: as ink is used up the bars get shorter in length.

There are two methods for checking the ink levels of your Ink Cartridges.

"View ink levels" direct access key

- Pressing the "View ink levels" direct access key on the Front Panel will impapertely show you the ink levels. For more information about direct access keys, see Using the Front Panel on page 2.

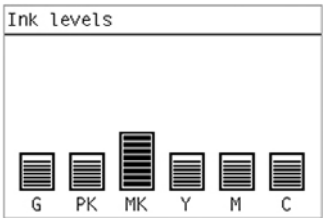

"View Ink Levels" from the ink menu

- Choosing the **View ink levels option** from the Ink menu will impapertely show you the ink levels:

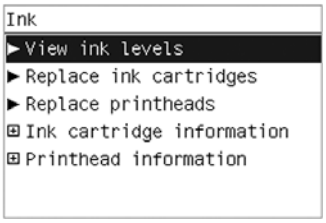

Obtaining ink cartridge information

1. Scroll to the Ink Menu icon and press **OK.**

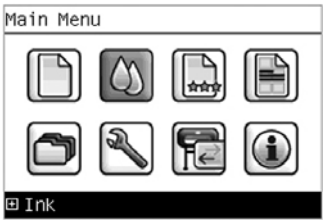

2. In the Ink Menu submenu, scroll to **Ink cartridge information** and press **OK.**

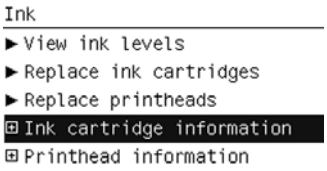

3. In the Ink Cartridge Information submenu, scroll to the Ink Cartridge that you want information on and press **OK.**

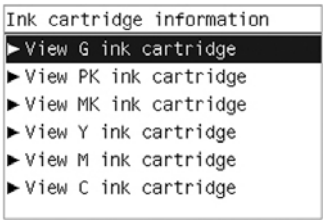

4. The front panel displays information on the selected Ink Cartridge. Use the **Arrow** keys to scroll through the information.

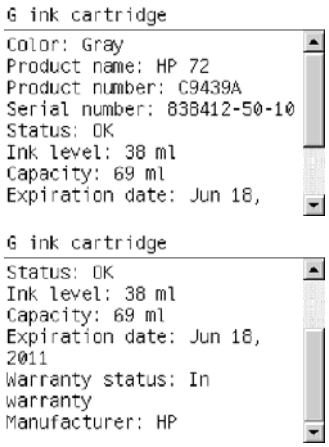

The information supplied is:

- The color of the Ink Cartridge.
- The make of the Ink Cartridge (HP no.72 is recommended).
- The product number of the Ink Cartridge.
- The serial number of the Ink Cartridge.
- The current status of the Ink Cartridge.
- The current ink level of the ink cartridge in milliliters.
- Original capacity of the ink cartridge in milliliters.
- The Expiration Date of the ink cartridge.
- The manufacturer of the Ink Cartridge (HP is recommended).
- The current warranty status of the Ink Cartridge.

The printer consumes more gray ink ink than M, C, or Y

This is not a problem, and no action should be taken to “correct” this attribute of the printer.

In general the higher frequency of change is because Matte Black ink is the one that is used for lines and black objects in technical papers (bond, coated, HW coated, natural tracing paper, etc.), which are the types of contents that are more commonly printed with this type of printer.

About gray ink

The T Series printers are the first HP Designjet technical products to include Gray ink. One thing that users may notice is that Gray ink is used in higher quantities than Cyan, Magenta and Yellow inks. This happens because of the following reasons:

1. Gray areas (which are very typical in technical drawings) can now be printed by using only Gray ink. In the past, these areas had to be printed by combining Cyan, Magenta and Yellow inks. This means that Gray ink is used more frequently than the rest of the inks (C, M, Y) which are now used less frequently, so the difference in consumption is noticeable. However overall the T Series printers will actually need to use in total less ink to print gray areas than previous Designjet products.
2. Soft colors can now be printed by combining C, M and Y inks with Gray. The addition of Gray ink softens the color, improving transition areas. It also allows printing soft colors by using less C, M and Y. These two types of contents are very typical and make the consumption of Gray to increase and the consumption of C, M and Y to decrease.

Conclusion

However, no matter the combination of inks that are used, when the total cc's of ink are added up, the T Series printers will always have a lower ink consumption than the HP Designjet 500, 800 and 1000 series for equivalent contents with equivalent levels of print quality.

Changing an Ink Cartridge

There are two occasions when you need to remove an ink cartridge:

- The ink cartridge is very low and you want to replace it with a full cartridge for unattended printing (you can use up the remaining ink in the first cartridge at a more convenient time).
- The ink cartridge is empty or faulty, and you must replace it to continue printing.

NOTE: Do not try to remove an ink cartridge while printing. Remove an ink cartridge only if you are ready to insert another one.

Make sure the printer wheels are locked (the brake lever is pressed down) to prevent the printer from moving.

Change an ink cartridge using the following procedure:

1. Scroll to the Ink Menu icon and press **OK.**

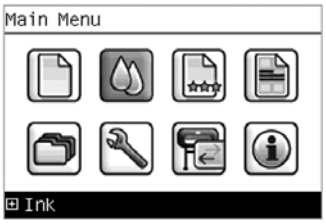

2. In the Ink Menu submenu, scroll to **Replace ink cartridges** and press **OK.**

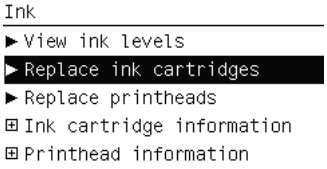

3. The front panel displays the status of the Ink Cartridges.

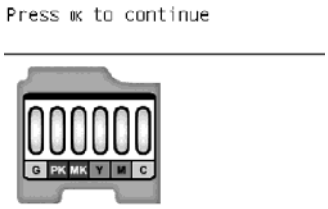

4. Press **OK** to continue.
5. Open the relevant Ink Cartridge cover for the Ink Cartridge you want to replace.
6. Pull the required Ink Cartridge straight up to remove it from the printer.
7. The front panel indicates the missing Ink Cartridge.

8. Before removing the cartridge from its wrapping, shake it vigorously.
9. Unwrap the new ink cartridge, find the label identifying the ink color. Check that the letter or letters marking the empty slot, matches the letter or letters on the cartridge label.
10. Insert the ink cartridge into its slot.
11. Push the cartridge into the slot until it snaps into position. You should hear a beep and see confirmation that the cartridge has been inserted.

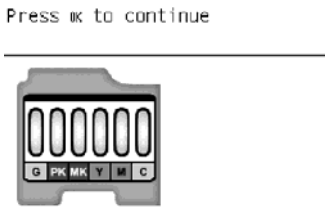

12. When all cartridges have been inserted, close the cover.

Printhead information, replacement and alignment

Obtaining Printhead Information

1. Scroll to the Ink Menu icon and press **OK.**

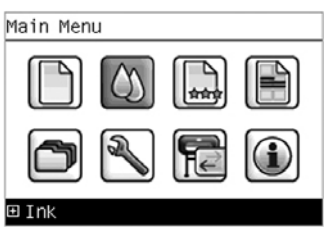

2. In the Ink Menu submenu, scroll to **Printhead information** and press **OK.**

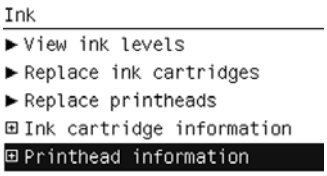

3. In the Printhead Information submenu, scroll to the Printhead that you want information on and press **OK.**

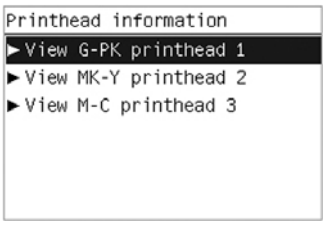

4. The front panel displays information on the selected Printhead.

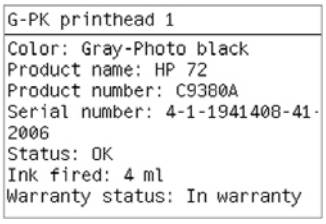

The information supplied is:

- The make of the printhead (HP no.72 is recommended).
- The product number of the Printhead.
- The serial number of the Printhead.
- The current status of the printhead.
- How much ink has been fired (consumed) by the printhead.

NOTE: It is possible for a printhead to consume more than one Ink Cartridge.

- The current warranty status of the Printhead.

Changing a Printhead

1. Scroll to the Ink Menu icon and press **OK.**

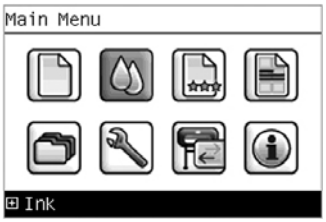

2. In the Ink Menu submenu, scroll to **Replace printheads** and press **OK.**

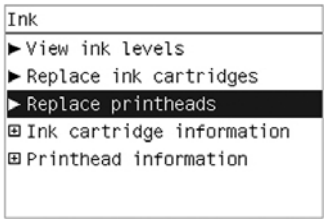

3. The printer moves the Carriage to the correct position to replace Printheads.

NOTE: If the carriage is left in the removal position for more than three minutes without inserting or removing any printheads, it will try to move back to its normal position at the right-hand end.

4. When the carriage has stopped moving, the front panel display will prompt you to open the window and lift the carriage cover.

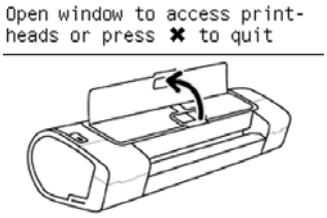

5. Open the window.

6. Lift the Carriage cover to access the printheads.

7. Lift the blue handle and pull the Printhead straight up out of the Carriage.

8. To insert a new printhead first remove the orange protective caps.

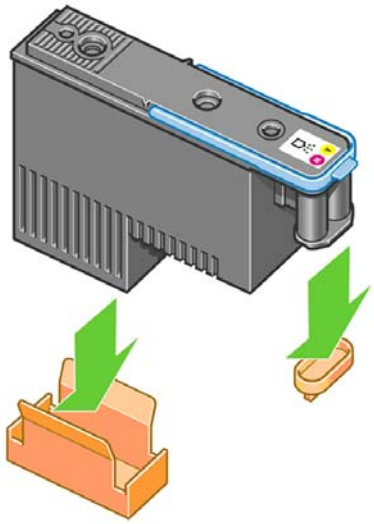

9. The printhead is designed to prevent you from accidentally inserting it into the wrong slot. Check that the colored label on the printhead matches the colored label of the carriage slot into which the printhead is to be inserted. Insert the printhead slowly and vertically, straight down. It may be damaged if you insert it too fast, or at an angle, or if you rotate it as you insert it.

10. Insert all other printheads that need to be installed, and close the carriage cover.

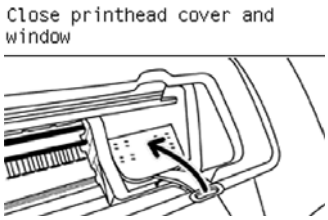

11. Close the Window.

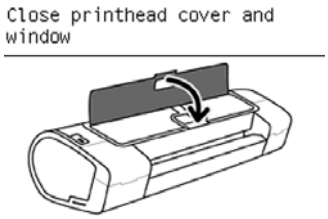

12. When all the printheads have been inserted correctly and accepted by the printer, the printer will beep. If the printer does not beep when you insert the printhead and the **Replace** message appears on the front panel display, the printhead may need to be reinserted.

    The front panel display confirms that all printheads are correctly inserted.

    The printer will start checking and preparing the printheads. The default routine process, when all printheads are changed, takes 25 minutes. If the printer finds problems in preparing the printheads, it will take longer, up to 55 minutes. For a single printhead insertion, the times vary between 15 and 35 minutes. After all printheads are checked and prepared, for the printhead realignment.

Aligning Printheads

Precise alignment between printheads is essential for accurate colors, smooth color transitions, and sharp edges in graphical elements. Your printer has an automatic printhead alignment process which runs whenever a printhead has been accessed or replaced.

In cases where the paper has jammed, you have used a custom paper, or are experiencing problems with color accuracy you may need to align the printheads. If the paper has jammed, it is recommended that you reinsert the printheads and initiate the realignment procedure with the Image Quality Maintenance menu.

NOTE: Do not use transparent and semi-transparent paper to align the printheads. Photo paper is recommended for the best quality.

Reinsert Printheads Procedure

1. If the realignment process is running and the wrong paper is loaded, press the Cancel key on the front panel. Do not print if the realignment process has been canceled. You can restart the alignment with the Image Quality Maintenance menu procedure.

2. Load the paper you wish to use. You can use a roll that is at least 610 mm (24 in) wide or a cut sheet that is A2 landscape or larger.

3. Remove and re-insert all the printheads, see Remove a printhead and Insert a printhead. This will start the printhead alignment procedure.
4. Ensure the transparent window closed, as a strong light source near the printer during printhead realignment can affect alignment.
5. The process will take about six minutes. Wait until the front panel display shows the process complete before using the printer.

Image Quality Maintenance Procedure

1. Load the paper you wish to use. You can use a roll that is at least 610 mm (24 in) wide or a cut sheet that is A2 landscape or larger. Do not use transparent and semi-transparent paper to align the printheads. Photo paper is recommended for the best results; plain, bond and thin coated papers provide acceptable but marginal results.
2. Press the Menu key to return to the main menu and select the Image Quality Maintenance menu icon.
3. Select Align printheads. The printer will check to see if it has enough paper to run the realignment.
4. If the loaded paper is satisfactory, the printer will run the realignment and print a realignment pattern. Ensure the transparent window is closed, as a strong light source near the printer during printhead realignment can affect alignment.
5. The process will take about five minutes. Wait until the front panel display shows the process complete before using the printer.

Scanning errors during alignment

If the alignment process FAILs, a Scanning problems message appears on the front panel. This means that the alignment has not completed successfully. Therefore the printer is not aligned and the alignment should be repeated before printing with good image quality. The problem may be due to:

- The paper used was not valid, repeat the alignment with valid paper.
- Printhead health problems, clean printheads.
- The alignment was done with the transparent window open, repeat the alignment with the window closed.

If the problem persists after using valid paper, cleaning the printheads, and keeping the window closed, there may be a failure in the scanning system needing reparation or the printheads, although clean, may not work and need to be replaced.

Ink cartridge and printhead status messages

Ink Cartridge Status Messages

OK	The Ink Cartridge is operating correctly and no action is required.
Missing	There is no Ink Cartridge present, or it is not properly connected to the printer
Low	The **Low** message is an early warning sign and it is advisable that new supplies should be obtained of that particular color. The amount of ink remaining in the Ink Cartridge depends on it's capacity, but there is approximately 14% of ink available for the user.
Very Low	When the**Very Low** message is displayed, overnight printing should not be attempted. Changing the Ink Cartridge is strongly recommended to prevent the printer from stopping halfway through a print. There is approximately 8% of ink available for the user.

Empty	The printer will stop and will not be able to continue printing until a new Ink Cartridge has been installed. If this occurs halfway through printing an image, you should check the quality of this image, as stopping mid-plot can affect the print. It would be recommended to reprint the image once a new Ink Cartridge has been installed.
Reseat	You are recommended to remove the Ink Cartridge and then reinsert it.
Replace	You are recommended to replace the Ink Cartridge with a new Ink Cartridge.
Altered	There is something unexpected about the Ink Cartridge's status.
Expired	The Ink Cartridge has passed the expiration date.

Printhead status messages

OK	The Printhead is operating correctly and no action is required.
Missing	There is no Printhead present, or it is not properly connected to the printer.
Test printhead separately	You are recommended to test the printheads individually to find the failing printhead. Remove all the printheads and insert them alone one by one, Closing the latch and the carriage cover after every insertion. The front panel display will indicate the failing one showing the reseat or replace message.
Reseat	You are recommended to start the printhead removal process from the front panel, but instead of removing the printhead, simply press the OK key on the front panel.
Replace	You are recommended to remove the printhead and then reinsert it; if that fails, clean the electrical connections; if that fails, replace the printhead with a new printhead.
Replacement incomplete	A printhead replacement process has not completed successfully, relaunch the replacement process and let it finish completely (it is not needed to change the printheads).
Remove	The printhead is not a suitable type for use in printing (for instance, a setup printhead).

Printhead Error Codes

The following table describes the Printhead Error Codes. Refer to the above descriptions of the status messages for the appropriate action.

Error Code	Status Name	Status Message	Description	Comments
0	Working	OK	The printhead is working properly	
1	Fails Logical V	Replace	The printhead may have a vcc short	
2	Fails Continuity	Reseat		Could be caused by bad insertion. Better to reseat the PEN than to reject it.
4	Shutdown		Not used	
8	Fails Vpp	Replace	Suspected vpp ink short	
16	Temp Extremely High	Replace	Printhead temperature above normal margins	Could be caused by a short in the ink supplies
32	Temp Extremely Low	Reseat	Printhead temperature below normal margins	Could be caused by bad Vpp continuity

Error Code	Status Name	Status Message	Description	Comments
64	Temp too High	Replace	Printhead temperature above normal margins	Could be caused by a short in the ink supplies
128	Temp too Low	Reseat	Printhead temperature below normal margins	Could be caused by bad Vpp continuity
256	Bad Acumen Info	Replace	Critical acumen info outside margins	Printhead has a manufacturing problem
512	No Pen	Missing	There is no printhead	
1024	Bad Accumen Access	Reseat or Test Separately	Acumen cannot be accessed	Bad acumen continuity or a short; Cannot identify problem printhead
2048	Wrong Model	Replace	Wrong printhead inserted	Mechanical lockouts should prevent this. Error is redundant
4096	Mismatch	Replace	Wrong color inserted	Mechanical lockouts should prevent this
8192	CSdata Not Responding	Reseat	CSdata commuication failed	Could be caused by bad insertion
16384	CSdata Transmit Error	Reseat	CSdata commuication incorrect	Could be caused by bad contact
32768	Fails Energy Calibration	Reseat	Energy calibration failed	Could be caused by bad contact
65536	Empty Dummy	OK during Purge		Requested during purge, otherwise should be removed
131072	Full Dummy	Remove		Requested during purge
262144	End of Life	Warning	Printhead warranty expired	
524288	Expired	Warning	Printhead has used expired or non-HP ink	

Solving ink-supply problems

Most of the problems that you could encounter when working with the ink supplies are solved with guidance from the front panel. A full list of front panel messages are supplied in the User's Guide.

You Cannot Insert the Ink Cartridge Into the Printer

1. Ensure that you have the correct HP no.72 Ink Cartridge.
2. Ensure that the Ink Cartridge is the correct color for that slot.
3. Ensure that the Ink Cartridge is the correct orientation, with the color coded label at the top.

NOTE: Never clean inside the Ink Cartridge slots as this can cause damage to the printer.

You Cannot Insert the Printhead Into the Printer

1. Ensure that you have the correct HP no.72 Printhead.
2. Ensure that the printhead is the correct color for that slot.

3. Ensure that the printhead is in the correct orientation.
4. Ensure that the protective cap is removed from the Printhead.

The front panel says to reset or replace a printhead

1. From the front panel, turn the power off then on.
2. Check the front panel display message, if it shows the ready message, the printer is ready to print. If the problem remains continue with the next step.
3. Remove the printhead.
4. Clean the electrical connections on the backside of the printhead with a lint-free cloth. You can carefully use a mild rubbing alcohol if moisture is needed to remove residue. Do not use water. You can use the Flex Contacts Cleaning Tool.

   This is a delicate process and may damage the printhead. Do not touch the nozzles on the bottom side of the printhead, especially not with any alcohol.

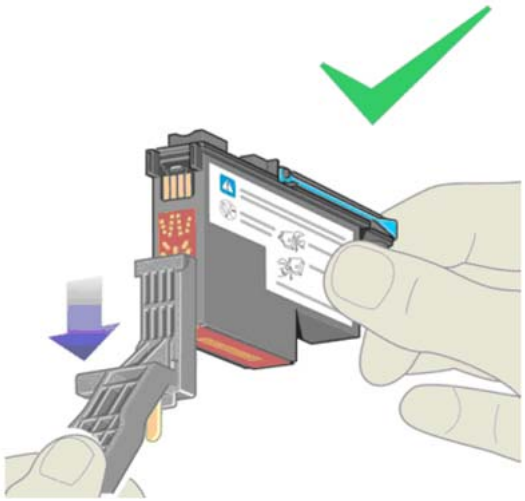

5. Reinsert the printhead.
6. Check the front panel display message. If the problem remains, try a new printhead.

Maintaining and cleaning the printheads

Clean the printheads

As long as the printer is kept turned on, an automatic cleaning is performed periodically. This ensures there is fresh ink in the nozzles and prevents nozzle clogs, which ensures color accuracy.

If you have not already done so, please read Horizontal lines across the image (banding) on page 19 and The Service Image Quality Diagnostic Print on page 7 before proceeding.

To clean the printheads, press the Menu key to return to the main menu and select the Image Quality Maintenance menu icon, then Clean printheads. If you have gone through the Image Quality Diagnostic print process, you know which colors are failing. Select to the pair of printheads which contain the failing colors. If you are not sure which colors to clean, you can also select to clean all printheads.

Cleaning all printheads takes about nine minutes. Cleaning a single pair of printheads takes about six minutes. Cleaning all printheads uses more ink than cleaning a single pair.

If you have cleaned the printheads using the Clean printheads procedure from the front panel and are still experiencing image quality problems, you can try cleaning the printhead nozzles manually using the following procedure.

NOTE: This is a delicate process and may damage the printhead. Do not touch the electrical connections on the backside of the printhead.

You must remove the printhead (see Changing a Printhead on page 40) and using a cotton swab and a little de-ionized, distilled water, or Carriage Interconnect Wiper clean the bottom of the printhead until the residue is removed.

Flex Contacts Cleaning Tool

NOTE: The Flex Contacts Cleaning Tool is part of the Maintenance Tool Kit. All the instructions needed to use the Flex Contacts Cleaning Tool will be packaged with the kit.

Whenever you replace the Printhead, check the empty slots to see if they need cleaning. In extreme circumstances, when a Printhead is inserted, it is possible that the printer will not recognize it due to the build-up of ink on the electrical connection between the Printhead and the Carriage Assembly.

Included with the printer is a Flex Contacts Cleaning Tool. This tool is provided in a separate package. It also contains replacement sponges and an instruction sheet. This tool should be used for cleaning the electrical interconnects of both the Carriage Assembly and the Printhead.

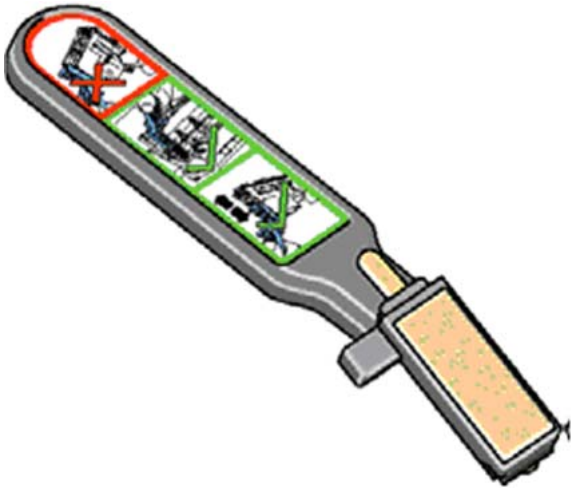

If the front panel displays the message “Reseat” or “Replace” next to the offending printhead, try cleaning the flex circuits of the Carriage and the Printheads using the Carriage Interconnect Wiper.

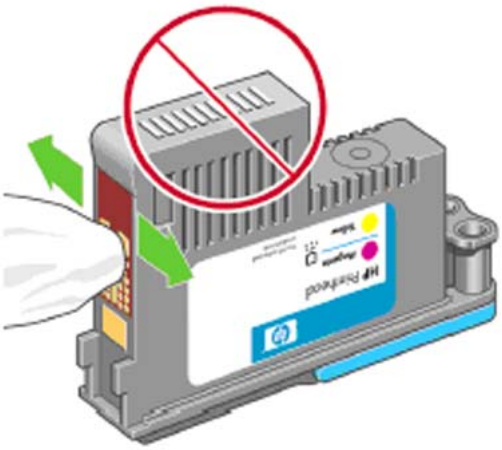

NOTE: Do not touch, wipe or attempt to clean the printhead nozzles. This can damage the printhead and reduce print quality.

Connectivity troubleshooting

Connectivity problems are resolved differently for USB, embedded LAN and Jetdirect connectivity. Follow the advice given in the appropriate section below.

USB device connectivity troubleshooting

If the printer experiences problems with USB enumeration (the computer does not detect the printer when the USB cable is plugged in) or with USB performance (throughput is slow) then try the following checks.

- Check that the USB port in the computer is a "USB 2.0 High Speed" port. Some old computers and USB hubs have slower "USB 1.1 Full Speed" ports, and those should not be used with Designjet printers. Do not ignore a warning message on your computer such as:

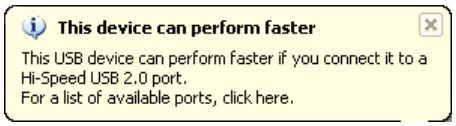

- Check the USB cable.
  - Check that the USB cable is **USB 2.0 Certified**: check the USB logo on the packaging of the cable, or on the cable itself, or check the specifications of the cable.
  - Try a shorter USB cable. Cables close to the 5 m limit often cause problems.
  - Make sure the USB cable doesn't pass near possible sources of electrical interference (CRT monitors, engines, etc.).
- Connect the printer to a different USB port on the computer. If possible, try using a different computer.
- Remove any other USB devices from the computer, or connect them to different USB ports.

Embedded LAN connectivity troubleshooting

Perform the following procedure, checking the connectivity carefully after each step to see whether the problem has been fixed.

1. Change the LAN cable.
   a. Disconnect the LAN cable at both the remote end and the printer end of the cable.
   b. Reconnect using the LAN cable. **Use a different LAN cable if possible.**
2. Try connecting to a different Ethernet socket in your network, router or switch.

3. If possible, try to reset the Ethernet switch or router. This may involve turning it off and on again.
4. Adjust the configuration settings.
   a. Print out the **original** printer I/O settings: from the front panel, select the Internal Prints menu, then **Service information prints** > **Print connectivity config**.
   b. Reset the I/O to factory defaults: from the front panel, select the Connectivity menu, then **Advanced** > **Restore factory settings**.
   c. **Restart the printer** and wait 5 minutes.
   d. Print out the **new** printer I/O settings: from the front panel, select the Internal Prints menu, then **Service information prints** > **Print connectivity config**.
   e. Connect to the printer's Embedded Web Server using the URL shown in the main page of the front panel.
   f. Compare the configuration information printed out before and after restoring to factory default settings. Set any custom I/O settings that may have been lost back to their desired values using the Configuration information printed.

EIO Jetdirect card connectivity troubleshooting

Perform the following procedure, checking the connectivity carefully after each step to see whether the problem has been fixed.

1. Change the LAN cable.
   a. Disconnect the LAN cable at both the remote end and the printer end of the cable.
   b. Reconnect using the LAN cable. **Use a different LAN cable if possible.**
2. Try connecting to a different Ethernet socket in your network, router or switch.
3. If possible, try to reset the Ethernet switch or router. This may involve turning it off and on again.
4. Adjust the configuration settings.
   a. Print out the **original** Jetdirect I/O settings: from the front panel, select the Internal Prints menu, then **Service information prints** > **Print connectivity config**.
   b. Print out the original Jetdirect protocol settings: from the front panel, select the Connectivity menu, then **Jetdirect EIO** > **Modify configuration** > **Information** > **Print protocols** > **Yes**. Return to the main menu.
   c. Reset the Jetdirect I/O to factory defaults: from the front panel, select the Connectivity menu, then **Jetdirect EIO** > **Restore factory settings**.
   d. **Restart the printer** and wait 5 minutes.
   e. Print out the **new** Jetdirect I/O settings: from the front panel, select the Internal Prints menu, then **Service information prints** > **Print connectivity config**.
   f. Print out the **new** Jetdirect protocol settings: from the front panel, select the Connectivity menu, then **Jetdirect EIO** > **Modify configuration** > **Information** > **Print protocols** > **Yes**. Return to the main menu.

g. Connect to the printer's Embedded Web Server using the URL shown in the main page of the front panel.

h. Compare the configuration information printed out before and after restoring to factory default settings. Set any custom I/O settings that may have been lost back to their desired values using the Configuration information printed.

USB host features

A USB host port is available in the formatter to support new features available in the HP Designjet T770/T1200 series.

Accessories

Three different HP accessories can be plugged into the USB Host port:

- Memory Upgrade Dongle, part number Q6789A. This accessory is available for the HP Designjet T770 only, and not for the HP Designjet T770 Hard Disk Version. It increases the processing memory of the printer from the regular 2 GB to 8 GB. This increased memory allows more complex jobs to be printed.
- PostScript Upgrade Dongle, part number Q6789B. This accessory is available for the HP Designjet T770 series, but not for the HP Designjet T1200 series. It enables the printer to accept PostScript and PDF files.
- External Hard Disk Drive, part number CN501A. This accessory is available for the HP Designjet T770 and T1200 series. When this accessory is connected the printer will keep all user data stored in the external hard disk only, which can be removed from the printer and stored separately for confidentiality or security reasons.

Copying the diagnostic package to a USB flash drive

The diagnostic package contains useful information from the printer to help you to find the cause of a problem. The USB host port provides a quick and easy way to retrieve this information into a standard USB flash drive. See Appendix C: Obtaining the printer log and the diagnostics package on page 90.

Firmware upgrade with USB flash drive

The USB host port can be used to upgrade the printer's firmware of the printer using a standard USB flash drive. In this case only a valid .FMW firmware package may be stored in the drive, with no other files. Connect the USB flash drive and follow the instructions on the front panel.

Special firmware upgrades

Emergency firmware upgrade

If it is not possible to perform a firmware upgrade using normal procedures (for instance, the printer has a System Error and the Embedded Web Server is inaccessible), it is still possible to perform a firmware upgrade in two different ways: start the printer in diagnostics mode and send a PLT file by FTP, or use a USB flash drive.

Send a PLT file via FTP in Diagnostics Mode

1. Ensure that the printer is connected to your local area network.
2. Open the printer's Diagnostics menu. See Entering the Diagnostics Menu on page 96.

3. Select **I/O Information**.

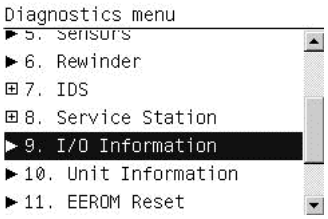

4. The front panel displays the I/O information.

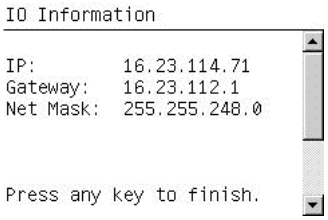

5. Open an FTP session from a computer connected to the same network as the printer, and send the PLT firmware file to the printer. If you don't have the PLT file, please escalate using the normal escalation mode.
6. After about 15 minutes, the front panel displays the Diagnostics menu again.
7. Restart the printer.

Use a USB flash drive to perform a firmware upgrade

1. Turn off the printer.
2. Ensure that your USB flash drive contains a valid FMW firmware file and no other files.
3. Connect the USB flash drive to the USB host port on the formatter.
4. Turn on the printer and follow the instructions on the front panel.

Forced firmware upgrade

When the printer is started for the first time, it may automatically request a firmware upgrade in order to fix some known issues.

NOTE: If the printer does not request a firmware upgrade, the printer box will not contain a USB flash drive, and you do not need to proceed with the following instructions.

You can respond in one of the following ways.

- Use the USB flash drive provided in the box with the printer.

  When a firmware upgrade is requested, you should find a USB flash drive in the box, containing the new FMW firmware file. Follow the instructions in the flier accompanying the USB flash drive.

  NOTE: The USB flash drive is provided only to upgrade the printer's firmware. No other uses of the USB flash drive are supported.

  If the USB flash drive is not in the printer box, or fails to work properly, then download the firmware instead, as follows.

- Download the FWM firmware file from the HP Web site.

  Store the file in a standard USB flash drive with no other files. Connect this alternative flash drive to the formatter's USB host port to perform the firmware upgrade, following the instructions on the front panel.

- Skip the firmware upgrade.

  If you cannot find the USB flash drive and you have no Internet connection, you can skip the forced firmware upgrade temporarily by pressing the **OK** key on the front panel three times, and the printer will continue with the initialization sequence. Make sure that the firmware upgrade is performed later. The printer will request the firmware upgrade every time that it starts, until the upgrade is performed.

2 System Error Codes

- Introduction
- Printer logs
- What to do if the Front Panel is blank
- Continuable and Non-Continuable Error Codes
- System Error Code Brief Descriptions
- System Error Codes—Full Descriptions
- Appendix A: How to troubleshoot SE 79:04
- Appendix B: Updating firmware in diagnostics boot mode
- Appendix C: Obtaining the printer log and the diagnostics package
- Appendix D: How to check the display list memory for an HP-GL/2 job

Introduction

Understand System Error Codes

System error codes are generally used to report internal system errors. The following pages contain a list of system error codes and their respective descriptions and recommended corrective actions. Try only one recommended action at a time and check whether the error code has disappeared.

Reporting a system error to HP support

If you have an error code that you cannot resolve, then report the error to the HP Response Center or the nearest HP Support Office. When reporting the error, have the following information ready:

NOTE: If you fail to provide any of the following information, HP Support cannot help you properly. Make sure you take time to gather all of this information.

- Model and Serial Number of the printer.
- The current firmware revision of the printer. Check firmware in Setup Menu / Information Menu / Show Printer Information.
- The internal error code, file, and line fields found on the Internal Error Screens available by pressing **Up** and **Cancel** at the same time when the System Error is shown on the front panel (as shown below). To get the file and line fields, you need to press the **Down** key on the front panel to scroll to the next screen.

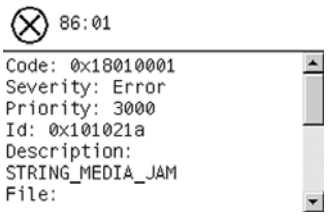

NOTE: The file and line fields are important to identify the source of the problem because the same internal Error Code can be reported in different files and line. In the File field, supply only the last part of the value (from last slash "/" to the end of the line). For example: for a file: /ae/ …./elektra/hal/motors/ControlledMotor/Elektra/ControlledMotorElektra.cpp you'll only need to provide the "ControlledMotorElektra.cpp" part to HP support.

- The Service Configuration Print.
- The Current configuration sheet.
- Which software application the customer is using (name, version, etc.).

TIP: When investigating a system error, you are recommended to use the diagnostic package to further understand the problem. To obtain the diagnostic package (which takes a few minutes), see Appendix C: Obtaining the printer log and the diagnostics package on page 90.

Printer logs

It is possible to have the printer log all the activities it performs in a log file. To further understand a system error code, it is useful to have a log showing the activities of the printer at the time when the system error occurred.

To get printer logs, see Appendix C: Obtaining the printer log and the diagnostics package on page 90.

What to do if the Front Panel is blank

The LEDs of the formatter (visible through the cover) and the power supply can help you troubleshoot a problem when the Front Panel is blank.

The following image shows the Power Supply LED, looking through the cover.

The following image shows the Formatter LEDs, which should be marked I, II and III.

Follow these steps to troubleshoot the issue.

1. Switch the power off from the back of the printer and disconnect the power cord. Reconnect the power cord and power on the printer.
2. Check that the front-panel interface cable is not damaged and is correctly connected between the Main PCA and the front panel.
3. Check that the connections between the Formatter and the Main PCA are not damaged and are correctly connected.
4. Use the following table to interpret the LEDs and find the source of the problem. Remember that you should read these LEDs when you push the **Power** button.

   Some combinations may require the replacement of two or more components. In this case, always replace one component at a time. Test the printer to see if the problem has disappeared (check the LEDs again). If the same LED sequence continues, replace the next component indicated in the table.

	Power supply LED	Formatter I LED	Formatter II LED	Formatter III LED	Front panel status	Part to change
1	Off	Off	Off	Off	Off	Power supply, see Electronics Module Main PCA and PSU on page 256.
2	On	Off	Off	Off	Off	Main PCA, see Electronics Module Main PCA and PSU on page 256.
3	On	On	Off	Off	n/a	Formatter, see Formatter on page 266.
4	On	*Flashing*	Off	Off	n/a	Hard Disk Drive, see Formatter on page 266.
5	On	On	*Flashing*	Off	n/a	Hard Disk Drive, see Formatter on page 266.

	Power supply LED	Formatter I LED	Formatter II LED	Formatter III LED	Front panel status	Part to change
6	On	On	On	Off	n/a	1. Formatter, see Formatter on page 266. 2. Main PCA, see Electronics Module Main PCA and PSU on page 256.
7	On	On	On	*Flashing*	n/a	Main PCA, see Electronics Module Main PCA and PSU on page 256.
8	On	On	On	On	Front panel light on	1. Front Panel, see Front Panel on page 270. 2. Formatter, see Formatter on page 266. 3. Main PCA, see Electronics Module Main PCA and PSU on page 256. 4. Front-panel cable, see Front Panel on page 270.
9	On	On	On	On	Off	Front Panel, see Front Panel on page 270.

Continuable and Non-Continuable Error Codes

Some of the Error Codes are continuable, which means you can press **OK** on the front-panel and continue working with the printer. Non-Continuable Error Codes do not allow you to continue working with the printer, in this case power the printer OFF and ON again and see if the System Error disappears. If the Error Code reappears, then the printer requires an on-site visit in order to resolve the problem.

System Error Code Brief Descriptions

Reading a System Error Code

System Error Codes explain which component/system is failing and what action should be taken to resolve the problem.

System Error Codes are displayed directly on the front panel (but can also be seen on the Information Page) and have been defined in the format **XX.YZ**. or **XX.n:YZ.m**.

- **XX**: Subsystem or process (2 digits).
- **n**: Subsystem or process index (if more than one used in the product) – optional.

  – e.g. Identify the Ink Supply (color and number).
- **Y**: Who should perform the action (1 digit) – (0 for User or 1 for Service Engineer).
- **Z**: Action to perform (1 digit).

System Error Code Table

The following table explains the **XX** part of the System Error Code or Warning:

Code	Component/System
01.0	Main PCA/Electronics module
02.1	Carriage PCA

Code	Component/System
03	Power supply
06	Formatter
08	Formatter/Front panel
11	Trailing cable
21	Service station
22	Ink supply station
24	Tube assembly (IDS)
26.n	Ink Cartridge (color = n)
27	Printhead error
38	Output Tray
39	Roll switches
41	Paper-axis motor
42	Scan-axis motor
45	Rewinder
47	Star wheel motor
48	PPS mechanism
51	Window Sensor
52	Drop detector
55	Line sensor
56	Drive roller analog encoder sensor
59	Electrical system
60	Initialization
61	Print queue
63	Input/output through LAN card
64	Input/output through USB port
65	Input/output (not known what port)
68	Loss of engine counters tracking
71	Memory management
72	Calibration
73	Servo
74	Firmware upgrade
74.1	Media Profile Update
75	Preventive Maintenance Kits
76	Disk Full
78	Media settings

Code	Component/System
79	Firmware
81	Media advance
84	Roll Feed
86	Paper path
87	Scan axis
93	Ink Pumping

Corrective actions Table

The following table explains the **YZ** part of the System Error Code or Warning:

Code	Recovery Action	Response
00	Replace	Possible for customer to perform action
01	Reseat/Reconnect/Clean/Adjust (manually)	
02	Calibrate/Adjust (using Automatic Process)	
03	Power off and restart the printer	
04	Upgrade System Firmware	
05	Upgrade Driver or Computer Software	
06	Add Accessory	
07	Escalate	
08	Send Plot Again	
09	Wrong Part Installed	
10	Replace	HP qualified personnel assistance required
11	Reseat/Reconnect/Clean/Adjust (manually)	
12	Calibrate/Adjust (using Automatic Process)	
13	Power off	
14	Upgrade System Firmware	
15	Upgrade Driver or Computer Software	
16	Add Accessory	
17	Escalate	
18	Send Plot Again	
19	Wrong Part Installed	

System Error Codes—Full Descriptions

This sections describes each of the system error codes and warnings that could be encountered while using the printer and provides the repaperl action required to solve the problem detected.

NOTE: Replace one component at a time and check whether the error has gone before replacing another component. Using this procedure you will be able to determine exactly which component failed.

System Error: **01.0:YZ**

Problem Description: Communication with Main PCA failed

Corrective action: Try the following:

1. Switch the power off from the back of the printer and disconnect the power cord. Reconnect the power cord and power on the printer.
2. Remove the Formatter and reinsert it again. Ensure that it connects properly in the Main PCA connector.
   - Replace the Main PCA. See Electronics Module Main PCA and PSU on page 256.
   - Replace the Formatter. See Formatter on page 266.

System Error: **01.1:YZ**

Problem Description: Error in the Main PCA

Corrective action: Try the following:

1. Switch the power off from the back of the printer and disconnect the power cord. Reconnect the power cord and power on the printer.
2. Replace the Main PCA. See Electronics Module Main PCA and PSU on page 256.
3. Replace the Formatter. See Formatter on page 266.

System Error: **01.2:YZ**

Problem Description: Failure communicating with an Ink Supply

Corrective action: Try the following:

1. Switch the power off from the back of the printer and disconnect the power cord. Reconnect the power cord and power on the printer.
2. Perform the Ink Delivery System diagnostic test. See Ink Delivery System (IDS) Test on page 116.

   – If the test finds that the ink supply is defective, replace it.

   – If the test does not find any errors, remove all the ink supplies from the ISS and reboot the printer.
3. Install the ink cartridges with the printer booted in normal mode. Use the replacement option available from the Front Panel and install the cartridges one by one. If an error appears after installing a supply, the last supply you installed is defective. Replace it.
4. Check that the cables between the Left Ink Supply Station and Main PCA are not damaged and are correctly connected.
5. Replace the Left Ink Supply Station. See Ink Supply Station, Left on page 283.
6. Replace the Main PCA. See Electronics Module Main PCA and PSU on page 256.

System Error: **02.1:YZ**

Problem Description: Problem with the Carriage PCA

Corrective action: Try the following:

1. Switch the power off from the back of the printer and disconnect the power cord. Reconnect the power cord and power on the printer.
2. Check that the Trailing Cable is not damaged. Check that the Trailing Cable is correctly connected between the Main PCA and Carriage PCA.
3. Replace the Carriage PCA. See Carriage PCA on page 226.
4. Replace the Trailing Cable and Carriage PCA Covers. See Trailing Cable on page 384.
5. Replace the Main PCA. See Electronics Module Main PCA and PSU on page 256.

System Error: **03:YZ**

Problem Description: Problem with Power Supply Unit

Corrective action: Try the following:

1. Switch the power off from the back of the printer and disconnect the power cord. Reconnect the power cord and power on the printer.
2. Perform the Electronics Module Test Diagnostic to troubleshoot the problem further. See Electronics Module Test on page 106.
3. Replace the Power Supply Unit (PSU). See Electronics Module Main PCA and PSU on page 256.

System Error: **03.0:10**

Problem Description: Battery of Real Time Clock ran down

Corrective action: Replace the battery. See Real-time Clock Battery on page 339.

System Error: **06:YZ**

Problem Description: Failure reading/writing NVM in Hard disk

Corrective action: Try the following:

1. Switch the power off from the back of the printer and disconnect the power cord. Reconnect the power cord and power on the printer.
2. Replace the Hard Disk. See Hard Disk Drive on page 278.

System Error: **11:YZ**

Problem Description: Trailing Cable does not seem to be detected

Corrective action: Try the following:

1. Switch the power off from the back of the printer and disconnect the power cord. Reconnect the power cord and power on the printer.
2. Check that the Trailing Cable is not damaged; replace it if necessary. See Trailing Cable on page 384. Check that the Trailing Cable is correctly connected between the Main PCA and Carriage PCA.
3. Replace the Carriage PCA. See Carriage PCA on page 226.
4. Replace the Main PCA. See Electronics Module Main PCA and PSU on page 256.

System Error: **21:YZ**

Problem Description: Failure moving Service Station

Corrective action: Try the following:

1. Switch the power off from the back of the printer and disconnect the power cord. Check the Primer Tubes. Reconnect the power cord and power on the printer.
2. Make sure that the Service Station path is clear. Remove any visible obstacles (screws, plastic parts, etc.) restricting the movement of the Service Station.
3. If the carriage has stopped over the service station, on the right side of the printer, check that the cutter is not activated. The cutter may be blocking the carriage over the service station, preventing the service station from performing the movement correctly. The cutter is on the left side of the carriage.
4. Perform the Service Station diagnostic test to troubleshoot the problem further. See Service Station Test on page 121.
5. Replace the Service Station. See Service Station on page 367.

System Error: **21.1:YZ**

Problem Description: Failure moving the Primer Motor of the Service Station

Corrective action: Try the following:

1. Remove the Right Cover and make sure the cables from the Main PCA to the Service Station are connected and are not damaged.
2. Perform the Primer Motor diagnostic test (listed under the service station diagnostic test) to troubleshoot the problem further. See Primer motor on page 123.
3. Replace the Service Station. See Service Station on page 367.

System Error: **21.2:YZ**

Problem Description: Failure testing the length of the Service Station path

Corrective action: Try the following:

1. Switch the power off from the back of the printer and disconnect the power cord. Check the Primer Tubes. Reconnect the power cord and power on the printer.
2. Make sure that the Service Station path is clear. Remove any visible obstacles (screws, plastic parts, etc.) restricting the movement of the Service Station.
3. If the carriage has stopped over the service station, on the right side of the printer, check that the cutter is not activated. It may happen that the cutter is blocking the carriage over the service station, preventing the service station from performing the movement correctly. The cutter is on the left side of the carriage.
4. Perform the Service Station diagnostic test to troubleshoot the problem further. See Service Station Test on page 121.
5. Replace the Service Station. See Service Station on page 367.

System Error: **22.0:YZ**

Problem Description: Left Ink Supply Station error, module 0.

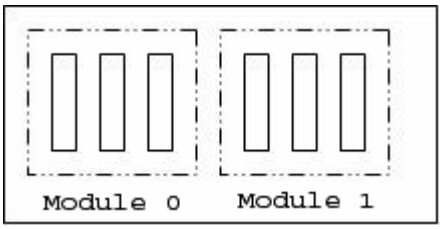

Corrective action: Try the following:

1. Switch the power off from the back of the printer and disconnect the power cord. Reconnect the power cord and power on the printer.
2. Check that the cables between the Left Ink Supply Station and Main PCA the are not damaged and are correctly connected.
3. Perform the Ink Delivery System diagnostic test to troubleshoot the problem further. See Ink Delivery System (IDS) Test on page 116.
4. Replace the Left Ink Supply Station. See Ink Supply Station, Left on page 283.
5. Replace the Main PCA. See Electronics Module Main PCA and PSU on page 256.

System Error: **22.1:YZ**

Problem Description: Left Ink Supply Station error, module 1

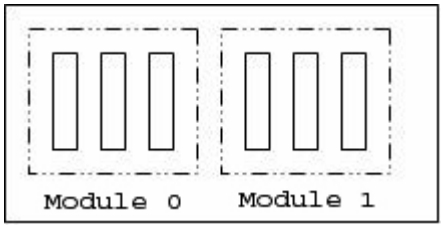

Corrective action: Try the following:

1. Switch the power off from the back of the printer and disconnect the power cord. Reconnect the power cord and power on the printer.
2. Check that the cables between the Left Ink Supply Station and Main PCA are not damaged and are correctly connected.
3. Perform the Ink Delivery System diagnostic test to troubleshoot the problem further. See Ink Delivery System (IDS) Test on page 116.
4. Replace the Left Ink Supply Station. See Ink Supply Station, Left on page 283.
5. Replace the Main PCA. See Starwheel Assembly on page 375.

System Error: **24:YZ**

Problem Description: Ink Setup failure

Corrective action: Try the following:

1. Switch the power off from the back of the printer and disconnect the power cord. Insert the new purgers, reconnect the power cord and power on the printer.
2. Perform the Ink Delivery System diagnostic test in order to check that the bongos (pushers) go up and down to pressurize ink in the tubes and the Out of Ink sensors work properly. See Ink Delivery System (IDS) Test on page 116.
3. Try purging the Ink Supply Tubes again once the printer has been restarted.
4. If the diagnostic test does not find any problem, install new cartridges in the printer and try purging the Ink Supply Tubes again. It could be that one of the cartridges is defective.
5. If the problem persists, replace the Ink Supply Tubes. You must bring purgers and ink cartridges. See Ink Supply Tubes on page 287.

Warning: **26:01**

Problem Description: Ink supply error found during IDS diagnostic test. In the front panel message you will see letters representing the names of the colors of the faulty supplies.

Corrective action: Try the following:

1. Reseat the faulty ink supply and repeat the Ink Delivery System diagnostic test.
2. If the problem persists, replace the faulty ink supply and repeat the Ink Delivery System diagnostic test.
3. If the problem persists, replace the Left Ink Supply Station. See Ink Supply Station, Left on page 283.

Warning: **39.1:01**

Problem Description: Roll 1 switch failed (standby or resume). Roll 1 has been unloaded.

Corrective action: There is no corrective action. This system warning code only notifies the user that the roll has been unloaded because an unexpected error occurred with Roll 1 in standby or resume operation.

Warning: **39.2:01**

Problem Description: Roll 2 switch failed (standby or resume). Roll 2 has been unloaded.

Corrective action: There is no corrective action. This system warning code only notifies the user that the roll has been unloaded because an unexpected error occurred with Roll 2 in standby or resume operation.

System Error: **41:YZ**

Problem Description: Electrical fault or current limit in Media-Axis Motor

Corrective action: Try the following:

1. Switch the power off from the back of the printer and disconnect the power cord. Reconnect the power cord and power on the printer.
2. Open the Window and check for any visible obstacles restricting the movement of the Media Advance Roller. If there is a wrinkled mass of paper inside the paper path, lift the Pinch wheels (using Media Lever) and clear the obstruction.
3. Perform the Paper Drive diagnostic test to troubleshoot the problem furthe. See Paper Drive Test on page 104.
4. Perform the Rewinder diagnostic test to troubleshoot the problem further. See Rewinder Test on page 114.
5. Check that the Media Advance Drive cable is not damaged and is correctly connected to the Main PCA.
6. Replace the Media Advance Drive. See Media Advance Drive on page 302.
7. Replace the Main PCA. See Electronics Module Main PCA and PSU on page 256.

System Error: **42:YZ**

Problem Description: Electrical problem (fault, current limit, overheating) in Scan-Axis Motor

Corrective action: Try the following:

1. Switch the power off from the back of the printer and disconnect the power cord. Reconnect the power cord and power on the printer.
2. Open the Window and check for any visible obstacles restricting the movement of the Carriage Assembly. Remove any obstacle to let the carriage move freely along the whole scan axis. If there is a wrinkled mass of paper inside the paper path, raise the pinch wheels (using the Media Lever) and clear the obstruction.
3. Check that the Scan-Axis Motor cable is not damaged and is correctly connected to the Main PCA.
4. Replace the Scan-Axis Motor. See Scan-axis Motor on page 363.
5. Replace the Main PCA. See Electronics Module Main PCA and PSU on page 256.

System Error: **45.1:YZ**

Problem Description: An error with the Rewinder 1 System (Upper Rewinder) has been detected.

Corrective action: Try the following:

1. Switch the power off from the back of the printer and disconnect the power cord. Remove the paper from Roll 1. Reconnect the power cord and power on the printer.
2. Check that the Rewinder 1 cable is not damaged and is correctly connected to the Main PCA.
3. Check that the Upper Right Roll Support is correctly attached to and aligned with the Right Cover.
4. Perform the Rewinder diagnostic test to troubleshoot the problem further. See Rewinder Test on page 114.
5. Replace the Upper Right Roll Support. See Roll Support, Upper Right on page 361.

System Error: **45.2:YZ**

Problem Description: An error with the Rewinder 2 System (Lower Rewinder) has been detected (T1200 series only).

Corrective action: Try the following:

1. Switch the power off from the back of the printer and disconnect the power cord. Remove the paper from Roll 2. Reconnect the power cord and power on the printer.
2. Check that the Rewinder 2 cable is not damaged and is correctly connected to the Main PCA.
3. Check that the Lower Right Roll Support is correctly attached to and aligned with the Right Cover.
4. Perform the Rewinder diagnostic test to troubleshoot the problem further. See Rewinder Test on page 114.
5. Replace the Lower Right Roll Support. See Roll Support, Lower Right (T1200 only) on page 355.

System Error: **47:YZ**

Problem Description: Starwheels motor error

Corrective action: Try the following:

1. Switch the power off from the back of the printer and disconnect the power cord. Reconnect the power cord and power on the printer.
2. Open the Window and check for any visible obstacles restricting the movement of the Starwheel Assembly, then clear the obstruction.
3. Check that the Starwheel Assembly cable is not damaged and is correctly connected to the Main PCA.
4. Perform the Scan Axis Starwheel diagnostic test to troubleshoot the problem further.
5. Replace the Starwheel Motor. See Starwheel Motor on page 382.
6. Replace the Main PCA. See Electronics Module Main PCA and PSU on page 256.

System Error: **48:YZ**

Problem Description: PPS system failure

Corrective action: Try the following:

1. Switch the power off from the back of the printer and disconnect the power cord. Reconnect the power cord and power on the printer.
2. Check that the Pen to Paper Space (PPS) Solenoid cable is not damaged and is correctly connected to the Main PCA.
3. Perform the Scan Axis PRS diagnostic test to troubleshoot the problem further.
4. Replace the Pen to Paper Space (PPS) Solenoid. See Pen to Paper Space (PPS) Solenoid on page 320.
5. Replace the Main PCA. See Electronics Module Main PCA and PSU on page 256.

System Error: **51:YZ**

Problem Description: Window Sensor failure

Corrective action: Try the following:

1. Check that the Window Position Sensor cable is not damaged and is correctly connected to the Main PCA.
2. Perform the Sensors Test to troubleshoot the problem further. See Sensors Test on page 113.
3. Replace the Window Position Sensor. See Window Position Sensor on page 398.

System Error: **52:10**

Problem Description: The printer has detected a failure in the Drop Detector.

Corrective action: Try the following:

1. Switch the power off from the back of the printer and disconnect the power cord. Reconnect the power cord and power on the printer.
2. Check that the Drop Detector cable is not damaged and is correctly connected to the Main PCA.
3. Replace the Drop Detector. See Drop Detector on page 251.
4. Replace the Main PCA. See Electronics Module Main PCA and PSU on page 256.

System Error: **55:YZ**

Problem Description: Problem with the Line Sensor. The printer has detected a failure to access the Line Sensor EEPROM.

Corrective action: Try the following:

1. Switch the power off from the back of the printer and disconnect the power cord. Reconnect the power cord and power on the printer.
2. Perform the Carriage Test to troubleshoot the problem further. See Carriage Assembly Test on page 110.
3. Check the Line Sensor connections to the Carriage PCA.
4. Replace the Line Sensor. See Line Sensor on page 296.
5. Replace the Carriage PCA. See Carriage PCA on page 226.

System Error: **56:YZ**

Problem Description: Drive roller analog encoder homing (also known as “zero search”) failed.

Corrective action: Try the following:

1. Switch the power off from the back of the printer and disconnect the power cord. Reconnect the power cord and power on the printer.
2. Perform the Media Path Test to troubleshoot the problem further. See Paper Drive Test on page 104.
3. Replace the Encoder Disk and Encoder Sensor. See Encoder Disk and Encoder Sensor on page 260.
4. Replace the Main PCA. See Electronics Module Main PCA and PSU on page 256.

System Error: **59.1:09**

Problem Description: Two electrical parts have been replaced at the same time.

Corrective action: Replace one part at a time, and restart the printer before replacing another.

System Error: **59.2:00**

Problem Description: An unsupported or reused part has been installed.

Corrective action: Install only new parts recommended by HP for this printer.

System Error: **60.1:YZ, 60.2:YZ**

Problem Description: Initialization error

Corrective action: Try the following:

1. Switch the power off from the back of the printer, wait two minutes, then switch it back on again.
2. Check the power cord; try connecting it to another power socket.
3. Check that the printer is properly connected in all other respects.
4. Switch the power off from the back of the printer; remove the Formatter; reinsert the Formatter; switch the power on again.
5. If the error persists, get the printer log (see Appendix C: Obtaining the printer log and the diagnostics package on page 90) and contact HP with the file.

System Error: **61:YZ**

Problem Description: The file format is incorrect or not supported for the current printer configuration and the printer cannot process the job.

Corrective action: Try the following:

1. Check whether the printer supports the file format (formats such as PS, PDF, TIFF and JPEG are supported by PostScript printers only).
2. Switch the power off from the back of the printer and disconnect the power cord. Reconnect the power cord and power on the printer.
3. Check the graphic language setting of the printer (refer to the *User's Guide*).
4. Resend the file to the printer.
5. Check that the printer has the latest firmware version. If not, update the firmware to the latest version.

System Error: **61:04.1**

Problem Description: The PostScript fonts seem to be missing.

Corrective action: Perform a firmware upgrade to re-install the fonts.

System Error: **61:08.1**

Problem Description: The file cannot be printed because it is password-protected.

Corrective action: Resend the file without password protection.

System Error: **63:YZ**

Problem Description: Input/Output problem through the network interface of the Formatter

Corrective action: Try the following:

1. Switch the power off from the back of the printer and disconnect the power cord. Reconnect the power cord and power on the printer.
2. Check that the Network cable is correctly connected to the Formatter.
3. Check that the printer has the latest firmware version. If not, update the firmware to the latest version.
4. Replace the Formatter. See Formatter on page 266.

System Error: **64:YZ**

Problem Description: Input/Output problem through the USB Port

Corrective action: Try the following:

1. Switch the power off from the back of the printer and disconnect the power cord. Reconnect the power cord and power on the printer.
2. Check that the USB cable is correctly connected to the printer.
3. Check that the printer has the latest firmware version. If not, update the firmware to the latest version.
4. Replace the Formatter. See Formatter on page 266.

System Error: **64.1:YZ**

Problem Description: The External Hard Disk accessory does not seem to be connected

Corrective action: Try the following:

1. Switch the power off from the back of the printer. Connect the External Hard Disk accessory, check that the USB cable is properly connected and power on the printer. If the External Hard Disk accessory is not available (has been lost or broken), proceed with step 2.
2. If the problem persists, power off from the back of the printer. Power on the printer again while pressing the keys **Menu**, **OK** and **Cancel** keys simultaneously until the front panel asks "Printer configured to use External Hard Disk. Do you want to revert the printer to Internal Hard Disk?". Confirm by pressing **OK** (twice). Remove the External Hard Disk accessory (if connected). The printer will restart.
3. After the printer reaches the Ready state, try connecting any other USB device (known to work properly) to the printer port where the External Hard Disk accessory should be connected.
    - If a message appears on the Front Panel reacting to the USB device just connected (such as "Please remove USB device" or "Press OK to..."), press **Cancel** and remove the USB Device. This means that the External Hard Disk accessory is faulty and should be replaced. See Formatter on page 266.
    - If nothing appears on the Front Panel reacting to the USB device just connected, the Formatter is faulty and should be replaced. See Formatter on page 266.

System Error: **65:YZ**

Problem Description: Memory Driver Internal I/O error, I/O Socket Manager Internal I/O error

Corrective action: Try the following:

1. Switch the power off from the back of the printer and disconnect the power cord. Reconnect the power cord and power on the printer.
2. Check that the unknown port cable is correctly connected to the printer.
3. Check that the printer has the latest firmware version. If not, update the firmware to the latest version.
4. Replace the Formatter. See Formatter on page 266.
5. Replace the Main PCA. See Electronics Module Main PCA and PSU on page 256.

Warning: **68:YZ**

Problem Description: Loss of engine counters tracking

Corrective action: The printer will continue to function correctly, but the life counters will not continue counting until you restart the printer.

System Error: **71:03**

Problem Description: Out of memory

Corrective action: Restart the printer.

Warning: **71:04**

Problem Description: Out of memory.

The total memory available in the printer depends on its configuration. It is reported as HP-GL/2 memory or PS/PDF memory. If the amount of memory that the printer needs to process the file is more than the amount available, the printer will display this system warning. The amount of memory required for processing the file is known as the 'display list memory':

- The display list memory should not be confused with the file size of the print job. The size of the display list memory depends on several variables such as the resolution, file size and file content.
- The display list memory is not visible to the user, but can be consulted by engineers to troubleshoot out-of-memory issues. See Appendix D: How to check the display list memory for an HP-GL/2 job on page 92

  .
- There have been a few cases in which a print job with a relatively small file size has triggered an out-of-memory message. Such print jobs typically have a large number of objects in them or have complex objects such as raster images with gradients or objects with multiple layers.

Corrective action: Try the following:

1. Upgrade the firmware to the latest version available.
2. Decrease the print resolution to 300 dpi.

   NOTE: If the customer does not accept the print quality after reducing the resolution or using Econofast print mode, proceed to the workaround in step 3.

- The resolution required by the printer to process the file is set by the print mode selected (Best, Normal, Fast). There is a setting available that enables you to decrease the resolution for each print mode to 300 dpi. If this setting is used, the rendering resolution will be reduced, but the output (printing) resolution will remain the default of the selected print mode. There could be an impact on Image Quality because of the reduction in the rendering resolution; this will be especially noticeable in circles and lines with very low inclination.

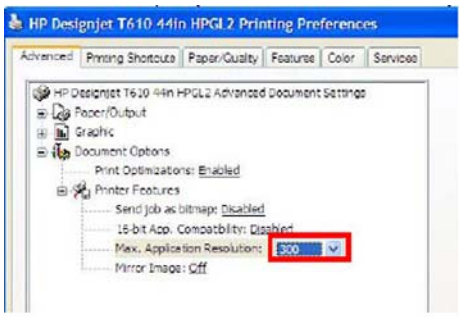

3. Use the 'Econofast' print mode. The rendering resolution will be set by default to 300 dpi. In the Paper/Quality tab of the printer properties window, select **Custom options** and press the **Settings** button. In the Custom Print Quality Options window, check the **Economode** box.

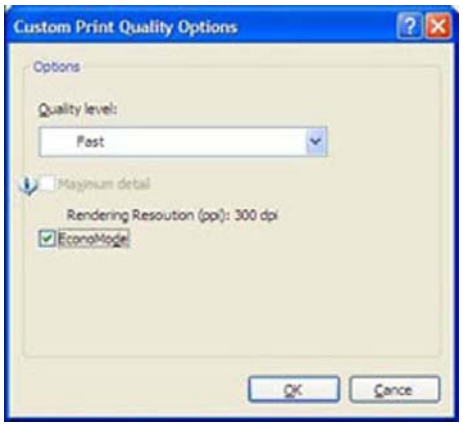

NOTE: If the Out of Memory message still persists, proceed to the next workaround.

4. Out of Memory issues can always be solved if the processing of the job can be performed before reaching the printer. This can be done by selecting 'Send Job as Bitmap'. The main processing of the print job will then be performed by the computer.This form of printing is recommended when the print job contains raster images, and mixed plots with raster images and lines, because the process of turning a print job made of raster images to vector images leads to a significant increase in the display list memory.

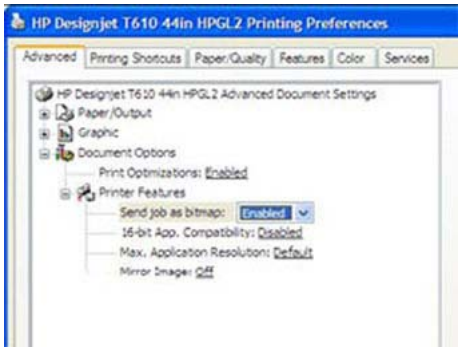

Warning: **72.02:YZ**

Problem Description: A service calibration should be performed.

Corrective action: To find out which service calibration to perform, print the calibration status. At the front panel, select the Internal Prints icon, then **Service information** > **Print calibration status**. Perform whichever calibration is needed.

Warning: **74:YZ**

Problem Description: Error uploading firmware update file

Corrective action: Try the following:

1. Switch the power off from the back of the printer and disconnect the power cord. Reconnect the power cord and power on the printer.
2. Make sure the connection between the computer and the printer is functioning properly.
3. Try to update the firmware again.

Warning: **74.1:YZ**

Problem Description: Error uploading paper profile update file

Corrective action: Try the following:

1. Switch the power off from the back of the printer and disconnect the power cord. Reconnect the power cord and power on the printer.
2. Make sure the connection between the computer and the printer is functioning properly.
3. Try to upload the paper profile update file again.
4. Make sure the version of the paper profile update file is compatible with the firmware version the printer is using. You can check this on the same Web page where you downloaded the paper profile update.

System Error: **75.21:YZ**

Problem Description: The spittoons (Left Spittoon, Service Station) have reached 80% capacity.

Corrective action: Use Preventive Maintenance Kit #2 to replace the Left Spittoon and Service Station.

System Error: **75.22:YZ**

Problem Description: The spittoons (Left Spittoon, Service Station) are full.

Corrective action: Use Preventive Maintenance Kit #2 to replace the Left Spittoon and Service Station.

System Error: **76:YZ**

Problem Description: Hard disk drive is full.

Corrective action: Remove any unnecessary files from the hard disk using the Embedded Web Server. If the problem persists, run the Hard Disk Recovery Utility (see Hard Disk Recovery Utility on page 140).

System Error: **78:08**

Problem Description: The job received cannot be printed without borders on this paper.

Corrective action: Use a paper that supports borderless printing.

NOTE: This system error code does **not** require service help. It should be resolved by the customer.

System Error: **78.1:YZ**

Problem Description: Media settings area missing in paper settings file

Corrective action: Try the following:

1. Switch the power off from the back of the printer and disconnect the power cord. Reconnect the power cord and power on the printer.
2. Check that the printer has the latest firmware version. If not, update the firmware to the latest version.

System Error: **79:YZ**

Problem Description: Generic firmware error

Corrective action: Try the following:

1. Switch the power off from the back of the printer and disconnect the power cord. Reconnect the power cord and power on the printer.
2. Check that the printer has the latest firmware version. If not, update the firmware to the latest version.

   NOTE: If you see system error 79:04, see Appendix A: How to troubleshoot SE 79:04 on page 77.

   NOTE: A firmware upgrade will not always solve the problem. The best way to solve this problem is to report the error to HP correctly. Make sure that you supply all the information accessed by pressing the **Up** and **Cancel** keys together while viewing the system error screen, or preferably provide the printer log and diagnostic package to HP. See Understand System Error Codes on page 54 and Appendix C: Obtaining the printer log and the diagnostics package on page 90.

System Error: **81:01**

Problem Description: Paper axis error—the copier will restart and run a diagnostic test

Corrective action: None

System Error: **81:YZ**

Initial checks:

This error can occur because the printer has been dropped during transportation, causing structural damage. Before continuing with the 81:YZ troubleshooting, first look for structural damage.

To identify the structural damage, look for the following three things:

- Consistent 81:YZ error codes.
- Platen fingers rubbing on the roller surface, leaving black marks on the roller.

- A gap on the platen beam. If there's any gap in Z (vertical direction) between the plastic feature of the platen and the metal side plate, then the chassis is damaged and the unit cannot be repaired.

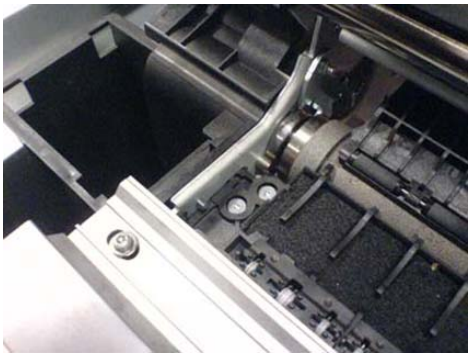

Problem Description:

Problem with paper advance. This source of error could come from an error in any of the following systems: paper motor, disk encoder, cables or main electronics.

Corrective action:

Try the following:

1. Open the Window and check for any visible obstacles restricting the movement of the Drive Roller. If there is a wrinkled mass of paper inside the paper path, lift the Pinchwheels (using the Media Lever) and clear the obstruction.
2. Perform the Media Drive diagnostic test to troubleshoot the problem further. See Paper Drive Test on page 104.
3. Perform the Rewinder diagnostic test to troubleshoot the problem further. See Rewinder Test on page 114.
4. Check the connections on the Main PCA; the Media Advance Drive is connected to the connector labeled Paper Motor.
5. Adjust the encoder disc and motor mount configuration using the Media Advance Drive installation instructions. See Media Advance Drive on page 302.
6. Replace the Media Advance Drive. See Media Advance Drive on page 302.

System Error: **86:01**

Problem Description: Scan axis error—the copier will restart and run a diagnostic test

Corrective action: None

System Error: **86:11**

Problem Description: Scan Axis movement requires too much force or energy.

Corrective action: Try the following:

1. Check that the cutter disengages correctly.
2. Lubricate the scan axis.
3. Use Preventive Maintenance Kit 1.

System Error: **87:YZ**

Problem Description: Problem with the Carriage Encoder Sensor readings

Corrective action: Try the following:

1. Check that the encoder sensor is correctly connected to the Carriage PCA.
2. Make sure the Encoder Strip is not broken or damaged. If necessary, replace it. See Encoder Strip, spring and attachment nut on page 263.
3. Make sure that the Encoder Strip is clean. If it is dirty, clean it, paying special attention to the area near the Service Station. See Cleaning the Encoder Strip on page 401.
4. Clean the Encoder Sensor.
5. Replace the Encoder Sensor.
6. Replace the Carriage PCA. See Carriage PCA on page 226.
7. Replace the Trailing Cables. See Trailing Cable on page 384.

System Error: **87.01**

Problem Description: Problem finding the Scan-axis encoder reading

Corrective action: Try the following:

1. Switch the power off from the back of the printer and disconnect the power cord. Reconnect the power cord and power on the printer.
2. Make sure that the encoder strip is clean. If the encoder strip is dirty, clean it, paying special attention to the area near the Service Station. See Cleaning the Encoder Strip on page 401.
3. Clean the encoder sensor.
4. Replace the Encoder Sensor.

System Error: **93:YZ**

Problem Description: Unable to pressurize the Ink Delivery System

Corrective action: Try the following:

1. Switch the power off from the back of the printer and disconnect the power cord. Reconnect the power cord and power on the printer.
2. Perform the Ink Delivery System diagnostic test to further troubleshoot the problem. See Ink Delivery System (IDS) Test on page 116.
3. Check that the cables between the Left Ink Supply Station and Main PCA are not damaged and are correctly connected.
4. Replace the Left Ink Supply Station, depending on the results of the diagnostic test. See Ink Supply Station, Left on page 283.
5. Replace the Main PCA. See Electronics Module Main PCA and PSU on page 256.

Appendix A: How to troubleshoot SE 79:04

Introduction

The system error 79:04 is a generic firmware error (equivalent to a blue screen in Windows). It's the system error that the printer will display when an unknown exception occurs that cannot be identified as relating to any specific subsystem of the printer.

Since this is a generic error, there can be multiple causes behind it. This document will cover the most probable causes behind a system error 79:04 and will recommend the most efficient troubleshooting steps to resolve customer issues.

It is important to mention that, although 79:04 system errors can be caused by a hardware malfunction, the vast majority of 79:04 system errors are pure software or firmware issues. Before doing anything else, you are recommended to try the following general-purpose solutions.

1. Update the printer's firmware to the very latest available firmware version, even if the printer appears to be running the latest firmware already.
2. Restore the factory settings from the front-panel's Setup menu.

If these do not solve the problem, continue reading about other possible solutions below.

Possible causes

Since the 79:04 system error is a generic error, the number of possible causes behind it is large. The majority can be grouped, however, into the following groups.

Job related SE79:04

A specific print job that is not correctly formatted for the printer or that is not correctly processed by it can trigger a 79:04 system error.

The incorrect format or processing can come from two sources:

- Incorrect commands in the job itself. For example, a PS job with some commands that do not have the correct PS format.
- Issues applying to the settings in the job

Possible symptoms

79:04 caused by a print job always have the same symptoms:

1. The job is received by the printer and starts to process.
2. In the middle of the processing, the printer stops and displays 79:04.
3. The printer will display the 79:04 system error again impapertely after reboot. This is due to the fact that the printer will try to reprint the job, which is pending in the queue, after reboot.
4. After the second reboot, the printer will start up normally
5. If the same job is sent again, it will always produce a 79:04 system error

   These types of 79:04 system errors are normally caused by jobs that have been generated by 3rd party applications (RIPs, 3rd party drivers, files exported by an application to PS, PDF, HP-GL/2, RTL, … or any other format supported by the printer). Jobs generated by HP drivers will not normally generate 79:04 system errors, since the output that our drivers generate is very

controlled and has been designed taking into consideration the characteristics of our printer's language interpreters.

There is an exception to this general rule: there are certain applications that can generate their own PS code (Adobe PhotoShop, Adobe Illustrator, Adobe Acrobat, Corel Draw, Freehand, QuarkXpress, …). When used with a PS driver, these applications generate the output PS themselves, instead of using the driver's rendering capabilities. This is known as PostScript pass-through. So, when using an HP PostScript driver together with an application that has PS passthrough capabilities, the PS code that comes into the printer has not been rendered by the HP driver, and, should the source file contain any PS commands that are not correctly processed by the printer, a 79:04 system error could occur even though an HP driver is being used.

Solutions and workarounds

When a job consistently generates a 79:04 system error, it is either because of a issue in the printer's firmware or because of a defect in the job itself (when it has been generated by 3rd party SW). In order to identify the cause and find out a solution, these issues should always be impapertely escalated to the GBU through the GCC.

Also, there are some workarounds and short-term solutions that can be tested in order to get the customer up and running in the shortest possible time:

1. Send the job using a variety of different settings. Many times, the issue is caused by a combination of the job contents combined with some specific setting(s).
2. If the customer is sending the file directly to the printer, try using the HP driver instead.
3. If the issue is occurring when printing through the HP PostScript driver from an application with PS passthrough, try changing the options in the application so that it prints PS as raster (the option is typically located in the "Advanced" options of the application's printing dialog).
4. In some cases, there may be an unfortunate interaction between the particular job and the I/O connection used to send that job to the printer. Try sending the same job using a print queue that uses a different type of connection. For example, use a network connection instead of USB, or use the LPD network printing protocol instead of port 9100.

Data related SE79:04

HP Designjet printers have Hard Disks and non-volatile memories that contain databases and files that can be modified with user data. Some examples include:

- The printer's queue
- The hard drive partitions that contain user jobs
- The database that stores the printer settings
- The database that stores accounting information

Some of this data is accessed by the printer at start-up, and some others are accessed as needed.

If any of this fields contains corrupt data or data with characters or values that cannot be correctly processed by the printer, a 79:04 system error may occur.

Possible symptoms

There are two different types of symptoms for data related 79:04 system errors:

1. When the corrupt data is accessed during start-up:
   a. The printer will display a 79:04 during the start up process
   b. Switching the printer off and on again will not solve the issue. The printer will continue displaying the 79:04 system error until the corrupt data has been cleared through a service procedure
2. When the corrupt data is accessed during normal printer operation:
   a. The printer will start up normally
   b. When the data is accessed (for example while printing, while navigating the queue or when changing some settings), the printer displays a 79:04 system error
   c. The printer can reboot normally
   d. When the data is accessed again (typically, under the same conditions as in step "b"), the 79:04 system error is displayed again

Solutions and workarounds

Many times, data-related 79:04 errors are resolved by means of hardware intervention. Since data are stored in physical components (RAM, EEROM and Hard Disk), replacing these components with new ones that are empty usually solves the problem. However, there are quicker and more effective solutions to these types of errors:

1. Clear all information that has been introduced by the user using the standard tools available in the printer.
   a. Delete all jobs from the queue (from the Front Panel or the EWS).
   b. Reset to factory defaults to clear the user's configurations and calibrations.
   c. Delete any non-standard paper preset in the printer (both the ones that have been created by the user and the ones that have been installed as OMES profiles through the EWS or the HP Printer Utility).
2. If step 1 did not resolve the issue, you can use Service Tools to clear additional information that could be causing the issue.
   a. Start the printer in Diagnostics Boot Mode.
   b. Perform an EEROM reset.
3. If step 2 did not resolve the issue, it is possible to run a recovery of the hard disk.
   a. Start the printer in Diagnostics Boot Mode.
   b. Perform a Hard Disk Recovery. This will erase data from the hard disk and reinstall the current firmware. It may take up to half an hour.
4. If step 3 did not resolve the issue, you can check the hard disk's file system.
   a. Start the printer in Diagnostics Boot Mode.
   b. Perform a File System Check. This will fix any error in the file system structure. It may take a few minutes, or up to an hour, depending on the state of the hard disk.

Important note:

It is possible that the corrupt data came to be in the printer as a consequence of some activity in the customer's workflow. In this case, it is possible that the issue will happen again. In these cases, it is very important to understand the sequence of events in the customer's workflow that led to the error occurring. Once the error can be traced in the customer's workflow, escalate the issue to the GBU (through the GCC). This is done to implement any changes in the printer's firmware that can prevent these issues occurring again.

Network related SE79:04

Most HP Designjet printers have built-in networking capabilities. Network settings can be set manually, but in the majority of cases, they are obtained automatically from the printer. These settings include many different fields, such as IP address and subnet mask, available gateways, host and domain names, etc.

In some cases, there can be issues in the firmware that can cause a certain value in one of these fields to be interpreted incorrectly, and this can lead to a 79:04 system error.

Symptoms

There is no single set of symptoms that can absolutely pinpoint a network related 79:04 system error. However, the following guidelines can be applied:

- It can happen when the printer starts up or when accessing the Network Configuration section of the front panel or Embedded Web Server. It can also occur apparently randomly when the printer is connected to the network. It can also occur any time a particular network action is performed, for example when print jobs are sent to the printer, or when connecting to the Embedded Web Server.
- In all these cases, repeating the action after restarting the printer with the LAN cable disconnected does not cause the 79:04 error to occur.

Solutions and workarounds

In the majority of cases, these issues are due to an issue in the printer's firmware. As soon as the conditions in which the issue happens are understood, it should be escalated to the GBU through the GCC.

At the same time, the following short-term solutions and workarounds can help the customer to get up and running in the shortest possible time:

1. Disconnect the network cable in order to restart the printer and change network settings.
2. Try resetting the embedded networking settings or Jetdirect settings. See Connectivity troubleshooting on page 48.
3. In the Network configuration menu in the Front Panel, disable any protocols that you are not using, including IPv6, IPSec, SNMP and WebServices.

> **NOTE:** Disabling SNMP or WebServices means that customers may not be able to see printer status information; and Windows and Mac OS print-queue installers will require the user to specify the printer's IP address and printer model manually.

4. If the above steps do not work, try using a different type of print queue. For example, if the problems occur when printing to a Port 9100 Socket print queue, try using the LDP protocol

instead, or USB. To do this, create a new print queue of the type required and try printing using the new queue instead.

5. If the above steps do not work and the customer is using the printer's embedded LAN connection, try using an accessory Jetdirect card instead. Similarly, if the customer is having problems using an EIO Jetdirect card, try disconnecting the Jetdirect card and using the embedded networking.

In most cases, network problems that seem to occur randomly (when the printer is not being sent print jobs) are caused by an interaction between some other devices in the customer's network and the printer. Isolating the printer from other devices in the network as much as possible by connecting the printer to a private network or a different network subnet may help the customer continue working until the root cause of the problem is understood and solved.

User Interaction related SE79:04

In some cases the printer may not react as expected when a certain set of conditions coincide. In these cases, if the printer doesn't know how to react, it may simple display a 79:04 system error and force a reboot. Some examples (not real) that can help to illustrate this:

- An error occurs when a job is cancelled when it is at the "Finishing print" state and when the queue is disabled
- An error occurs if the Window is opened while the printer is checking the printheads

These errors will most likely only happen in very specific corner cases that have not been identified during the development or the qualification of the printer, so normally, they do not severely impact the customer, as they do not affect their regular working flows.

Symptoms

The symptoms here are as numerous as the number of possible interactions between the user and the printer. In any case, it's possible to identify the steps that caused the error to occur and avoid them as the steps will always be the same with no variance.

Important: An major element in determining the error is what the state the printer was in at the time the error was displayed. Actions the user has made when the printer is drying for example can produce an error, whereas the same action when the printer is doing something else (or is idle) may not produce any errors.

Solutions and workarounds

The recommended action plan in these cases is to identify the previous steps that caused the error and:

1. Escalate the issue to the GBU through the GCC in order to have it corrected in the firmware.
2. Recommend to the customer that they try to avoid the same steps to prevent the issue
3. If the conditions that cause the error are in the customer's regular workflow, try to identify a different way of achieving the same result out of the printer.

Random SE79:04: Concurrence issues and memory leaks

Some 79:04 errors happen randomly when the printer is being heavily used. However, it's impossible to find a single set of conditions that reproduce the problem. It just happens from time to time, without a defined pattern.

These random 79:04 can have two different types of root causes:

- Memory leaks: before a program is executed, it allocates the memory it will need. After the execution is complete, the allocated memory is freed to be used by other programs. If the allocation or the release of the memory are not properly programmed, every time the program is executed some memory will be incorrectly labeled (either as used or as free). This is known as a memory leak. When a program with a memory leak is executed a lot, the memory becomes progressively full (since it is not properly freed). When the leak becomes too big, the printer is left 'out of memory' to execute new processes and a 79:04 is triggered
- Concurrence issues: there are certain resources that can be accessed by multiple programs or by multiple executions of the same program (what is known as multiple threads). Access to these resources must be correctly controlled to prevent unexpected behavior. Issues caused by an incorrect control of these resources are concurrence issues.

In the following you have a simple example: let's imagine that there is a counter that controls the communication between the Jetdirect card and the printer's firmware. Whenever a new packet of information is sent by the Jetdirect card to the printer, the counter increases. When the printer receives the packet and processes it correctly, the counter decreases. Another process checks the counter from time to time to see its value and take conclusions from it. If the counter is near 0, it means that the printer is processing correctly, and if it grows too big, it may mean that there is a bottleneck somewhere and maybe the Jetdirect card throughput is decreased to control its speed to the printer. However, if the access to this counter is not properly controlled, undesirable effects may happen: in a real environment, a Jetdirect card processes thousands of information packets per second, so this counter is updated frequently, both by the Jetdirect and the printer. If at a certain point the Jetdirect and the printer try to access the counter at the same time and the code is not prepare to handle this, it may happen that the Jetdirect cannot increase the counter because the printer is writing to it, and what's worse, that it does not realize this fact. If this happens a few times each second, it may happen that the counter is decreasing faster than it's increasing and that at a certain point it has a negative value. And then, what will the process that is checking this counter do? Most likely, the process will not be prepared to react to a negative value and will launch an exception that will trigger a 79:04 system error.

Symptoms

This type of 79:04 always occurs in heavy load conditions, so the symptoms will always be similar to this pattern:

- A printer that is being heavily used (printing a project or in a reprographics environment) produces 79:04 errors randomly, forcing the user to reboot.
- After rebooting, the printer can be used without any issues for an extended period of time, but if the workload is consistently high, a random error will occur again.
- The error can never be associated with a specific file. The file that was being printed when the error occurred the last time can be printed without issues after reboot. And a file that has been printed without issues several times can trigger the error in the future.
- This error is very dependant of the workflow the customer has. The most common user workflows have been extensively tested both by HP and by our beta sites, so it is highly unlikely to see random 79:04 issues in these cases. These random issues tend to occur in very specific corner cases, and cannot be reproduced unless the exact conditions of the workflow are replicated. They normally happen when sending files generated by external applications (RIPs, 3rd party drivers, etc.)

Workarounds and solutions

Random 79:04 errors are, by far, the most complex ones to diagnose and to fix. The only solutions available in these cases are:

1. Run the Hard Disk Recovery utility (see Hard Disk Recovery Utility on page 140).
2. Identify the root cause (either in the files or in the firmware) and fix it in the code, which requires the intervention of the GBU.
3. Test any options available to modify the customer's workflow and see if any combination of them solves the issue.

In both cases, a profound understanding of the customer's workflow is necessary. In particular, the information that is needed is:

- Printer front panel settings
- Application that is being used; RIP or driver that is being used
- Application/RIP/Driver settings
- Type of output files this application, RIP or driver is generating
- Some sample files that are representative of what the customer is using
- Operating System
- Method of connection to the printer
- A description of the normal flow when the issue occurs and the typical frequency of occurrence (for instance, once every hour when sending several files non-stop, each of them with multiple copies)

You are recommended to use the Diagnostics Package to obtain this kind of information.

With this information, the environment can be replicated in order to try to find workarounds. This is also the information that will be needed at the GBU to investigate and fix the root cause of this issue once it is escalated.

Hardware related SE79:04

Hardware is, by far, the least likely cause of a 79:04 system error. Replacing hardware components does not normally fix the issue and increases the total turn around time in finding a workable solution.

In some cases, a failure in a component in the printer's electronics may cause a 79:04 system error, since the printer's electronics are involved in the execution of the firmware and the processing of jobs. It needs to be noted, however, that hardware failures in the electronics tend to produce specific system errors that point directly to the component that is failing.

Some HW causes that could be behind a 79:04 error are:

- Defective clusters in the Hard Disk drive. If these clusters are used to execute the firmware or to process a job, they may produce a 79:04. It needs to be noted however, that most 79:04 errors that are resolved by an HDD replacement are in fact, data related 79:04 that could have been solved more efficiently and quickly following the steps in Section 3.
- Defective memory segments. If the RAM memory has some defective segments, a 79:04 may occur when these segments are used.
- Intermittent defects in the electronic components that are involved in the processing of a job: Carriage PCA, Trailing cable, Formatter and Main PCA. This is a highly unlikely cause, since defects in these components will produce subsystem specific errors.

Symptoms

There's no single set of symptoms behind hardware related 79:04 system errors. The most usual ones, however are:

- 79:04 during start up. Rebooting the printer may or may not solve the problem
- 79:04 while processing or printing a job. Rebooting the printer and printing the same job does not always produce the error.

Solutions and workarounds

In the following procedure perform each step as it appears in the list and only move on to the next step once you are sure the 79:04 error has not been cleared:

1. Reboot the printer in Diagnostics Boot mode and execute the service tests to validate the functionality of all the electronics components
    - Execute the troubleshooting for "data related" system errors, refer to page 3, Data related SE79:04
2. Replace the memory
3. Replace the HDD
4. Escalate the issue before replacing any additional parts.

Troubleshooting based on symptoms

This section will describe which troubleshooting steps to perform for a 79:04 system error based on the symptoms of the issue. Perform each step as it appears in the list and only move on to the next step once you are sure the 79:04 error has not been cleared:

Front panel displays 79:04 at Start-up

1. Reboot the printer twice. If the System error has been caused by a job because its in an incorrect format, rebooting twice will clear the error (the first time after reboot, the printer will attempt to print the job again, and this will cause the error to re-appear). If rebooting the printer twice solves the issue, then it is an issue related to the job and you should refer to page 2, Job related SE79:04.
2. Upgrade the printer's firmware. Even if the currently installed firmware version is the latest one, re-install it. Since the printer cannot start normally, you will need to upgrade the firmware while booting the printer in Diagnostics Boot Mode. For this, a special file and a special upgrade process will be needed. For more information, see Appendix B: Updating firmware in diagnostics boot mode on page 89 .
3. Disconnect the network cable and restart the printer. If this solves the problem, then it is a network related 79:04 and you should follow the guidelines for this type of 79:04.
4. Remove all cartridges, printheads and printhead cleaners (if available). Unload the paper. Restart the printer. If the printer can start normally, insert the consumables one by one until you isolate the one that is causing the error. Do **not** insert any of the replaced consumables in another printer

5. Restart the printer in Diagnostics Boot Mode and perform the “Electronics test”. If an electronic component is identified as faulty, replace it.

    - Restart the printer in Diagnostics Boot Mode and Reset the EEROM. If the issue is solved by this, this is a data related 79:04 system error and you should follow the guidelines, refer to page 3, Data related SE79:04.

6. If the unit has been used for some time and suddenly has started to show this behavior, replace the Hard Disk Drive (it may be included with the Formatter in some models).

7. If the issue is new and the issue happens since the first boot, do **not** replace the HDD.

8. If none of the previous steps solved the issue, escalate the issue with the following information:

    - Unit information: S/N, P/N, accessories
    - Conditions where the problem occurs and conditions prior to the first occurrence of the problem
    - The results of the previous 8 steps
    - The System Error detailed information (this can be obtained by pressing CANCEL + Down)
    - The printer logs. In order to obtain the printer logs, see Appendix C: Obtaining the printer log and the diagnostics package on page 90.

Front panel displays 79:04 during printer operation – not while sending jobs

1. Reboot the printer.

2. Upgrade the printer’s firmware. Even if the currently installed firmware version is the latest one, re-install it.

3. Reset the printer to factory defaults

4. In order to narrow the scope of the issue, try the following:

    a. Disable the queue

    b. Disable any unused network protocols

    c. Disable SNMP and WebServices (if they are available in the printer

    d. Disable “Sleep mode” from the Service Utilities menu

    e. Delete any Paper Presets that you may have uploaded or created using the printer's Spectrophotometer

5. Restart the printer in Diagnostics Boot Mode and perform the “Electronics test”. If an electronic component is identified as faulty, replace it.

6. Restart the printer in Diagnostics Boot Mode and Reset the EEROM. If the issue is solved by this, this is a data related 79:04 system error and you should follow the guidelines for this type error.

7. Format the Hard Disk drive. To do so, you will need to start the printer normally, enter the Service Utilities menu and then the Secure Disk Erase option. Set the Erase method to “Fast Erase” and then perform the disk erase process. This will take 45-75 minutes and will erase all user information from the disk, resolving any issue caused by corrupt data. After the erase process, a firmware update will be required. If this solves the issue, this is a data related 79:04 system error and you should follow the guidelines for this type of error.

8. Try to identify the combination of settings or actions that led to the system error and try to reach the same result with a different combination. Escalate the issue to fix the original problem.
9. If none of the previous steps could solve the issue, escalate it with the following information:
    - Unit information: S/N, P/N, accessories
    - Conditions where the problem occurs and conditions prior to the first occurrence of the problem
    - The result of the previous 8 steps
    - The printer information pages (either printed and faxed or obtained through the Embedded Web Server)
    - The System Error detailed information (it can be obtained by pressing CANCEL + Down)
    - The printer logs. In order to obtain the printer logs, see Appendix C: Obtaining the printer log and the diagnostics package on page 90.

Front panel displays 79:04 while printing

While printing a single job

The error happens after a single job is sent. It's easy to identify which job that has produced the error, since every time that this same job is sent, the error is replicated.

1. Reboot the printer twice (after the first reboot, the printer will show the 79:04 system error again, since the printer will attempt to reprint the last job in the queue, which is the one that caused the issue)
2. If you are using an HP driver, update the driver to the latest version
3. Upgrade the printer's firmware. Even if the currently installed firmware version is the latest one, re-install it. Send the job using different print settings. The following ones can be helpful:
    a. Try sending the job without selecting a paper profile in the driver
    b. Try changing the Image Quality settings
    c. If you are using the HP-GL/2 driver, try the option "Send job as bitmap"
    d. If you are using the PS driver, try using the HP-GL/2 driver instead
    e. If you are using the PS driver from an Adobe application (or any other application that can handle PS), try changing the application's print settings so that the PS is generated as Raster.
4. Try the following Front Panel settings:
    a. Change the Print Language option in the Front Panel from "Automatic" (which is the default setting) to the language that is being printed (PS, HP-GL/2, …)
    b. Queue = OFF
    c. Start Printing = After processing
    d. For PS SKUs, try changing the encoding setting ("Automatic" by default) to Binary or ASCII

5. If you are using a 3rd party application that does not print through the HP driver, try modifying the printing workflow by:

   a. Using an HP driver

   b. Changing the settings in the application's printing dialog

6. If you are using an accessory Jetdirect card, try using the internal network connector or USB (if available).

7. Escalate the issue, providing the following information:

   - Unit information: S/N, P/N, accessories
   - Conditions where the problem occurs and conditions prior to the first occurrence of the problem.
   - The result of the previous 7 steps
   - The printer information pages (either printed and faxed or obtained through the Embedded Web Server)
   - The System Error detailed information (it can be obtained by pressing CANCEL + Down)
   - Information on the workflow:
     - Operating System
     - Application
     - Driver
     - Settings in the driver and the application
     - Settings in the printer
     - Connection method and settings

     The original file along with the information on how to reproduce the issue

     A print to file that can reproduce the issue
   - The printer logs. In order to obtain the printer logs, see Appendix C: Obtaining the printer log and the diagnostics package on page 90.

Random 79:04 during continuous printing

The error does not happen with a single job. It happens randomly during continuous printing, normally while the printer is managing a heavy load (printing a project or in a reprographics environment).

This type of error is caused either by memory leaks or by concurrence issues in the printer's firmware. They normally happen in non common environments where these memory leaks or concurrence issues that have not been detected during qualification have occurred. These issues cause the printer to crash at a completely random moment during printing, and are not associated to a specific job.

Because of this, troubleshooting these issues is normally quite complex.

1. Reboot the printer twice (after the first reboot, the printer will show the 79:04 system error again, since the printer will attempt to reprint the last job in the queue. If the issue continues occurring randomly, continue troubleshooting

2. If you are using an HP driver, update the driver to the latest version

3. Upgrade the printer's firmware. Even if the currently installed firmware version is the latest one, re-install it.
4. Try restoring the factory default settings from the printer's front panel.
5. Try the following changes in the workflow:
   a. Change the Print Language option in the Front Panel from "Automatic" (which is the default setting) to the language that is being printed (PS, HP-GL/2, …)
   b. Queue = OFF
   c. Start Printing = After processing
   d. For PS SKUs, try changing the encoding setting ("Automatic" by default) to Binary or ASCII
   e. If you are using the HP-GL/2 driver, try sending the job as a bitmap
6. If you are using a 3rd party application that does not print through the HP driver, try modifying the printing workflow by:
   a. Using an HP driver
   b. Changing the settings in the application's printing dialog
7. Escalate the issue with the following information:
   - Unit information: S/N, P/N, accessories
   - The printer information pages (either printed and faxed or obtained through the Embedded Web Server
   - The System Error detailed information (it can be obtained by pressing CANCEL + Down)
   - Information on the workflow:
     - Operating System
     - Application
     - Driver
     - Settings in the driver and the application
     - Settings in the printer
     - Connection method and settings
   - Exact information on how to replicate the environment that reproduces the issue, including some example files that can be sent to the printer to replicate a heavy load environment. These files will need to be:
     - Original application files, if the issue happens printing from an application through our driver
     - Print to files if the issue happens printing from a 3rd party application
   - Information on the approximate frequency of the occurrence of the issue
   - The printer logs. In order to obtain the printer logs, check the following appendix.

Appendix B: Updating firmware in diagnostics boot mode

If the printer is displaying a 79:04 system error during start up and will not start normally, then services like the Embedded Web Server will not work.

Since the EWS is necessary to update the printer's firmware using the FMW file which is provided in Designjet Online, when the printer does not boot, an alternative method to update the firmware will be required.

The following method can be used to upgrade the firmware of a printer that will not boot normally:

1. Start the printer in Diagnostics Boot mode. See Using the Front Panel on page 2.
2. Perform the I/O information test and take note of the printer's IP address. See I/O Information Utility on page 124.
3. Connect to the printer using FTP:
   a. From a DOS console (or a Linux console in Mac), open a connection to the printer: ftp <printer's IP address>
   b. Configure the connection to send the data correctly: bin > hash
4. Upload the firmware file (> put <firmware.plt>.Standard FMW files that are available in the customer Web site will not work with this method, since FMW files need to be uploaded through the EWS in order to work. You will need to use a firmware file in PLT format instead. You can obtain the PLT firmware for the latest available firmware versions in the LFP Customer Assurance Web site (http://bcnsite.bpo.hp.com/csw/).

Appendix C: Obtaining the printer log and the diagnostics package

The printer keeps an internal log of its own actions. When a system error occurs, the printer log may help you to find the cause and the solution. By default, whenever it restarts, the printer deletes the current log and starts a new one, to avoid using a lot of hard disk space.

You can obtain the printer log through the diagnostics package. There are two types of diagnostic package:

- Diagnostic package (reduced level)
- Extended diagnostic package (full level)

And there are two ways of retrieving the information:

- From the Front Panel with a USB flash drive (reduced level only)
- From the Embedded Web Server (reduced or full level)

NOTE: If the extended diagnostic package is available, it will be the only one visible from the Embedded Web Server. In order to use the reduced diagnostic package from the Embedded Web Server, you must disable the extended diagnostic package.

When you have obtained the information, it should be attached to the customer case.

Front panel method

This method works only if you have a standard USB flash drive. If you do not have a flash drive, use the Embedded Web Server method. You are also recommended to use the Embedded Web Server if you need the extended diagnostics package to solve a particularly difficult problem.

1. Take a standard USB flash drive, formatted as FAT32.
2. You have a choice of two alternative methods:
   - Create an empty file in the USB flash drive (right-click, **New** > **Text Document**) and name it **pdipu_enable.log**. Then insert the USB flash drive into the printer and go to step 3.
   - Insert the empty USB flash drive into the printer, then hold down the Up and Down arrow keys simultaneously until you hear a short beep.

     NOTE: If the front panel shows a message saying that the USB flash drive is not supported by the printer, ignore the message and continue.
3. The printer starts to copy the diagnostic package to the USB flash drive. Wait for one or two minutes. You may hear several short beeps for each file copied to the USB flash drive.
4. When you hear one long beep, that means the entire diagnostics package and the printer log have been copied to the USB flash drive. You can now remove the drive.
5. It will have created a folder with the name *part number_serial number_time stamp*, and in this folder you'll find one or more files with the extension **trb**. As the name of the folder contains the serial number, you can reuse the flash drive for different printers and the information will not be lost.

Embedded Web server method

1. You can access the Embedded Web Server by typing the IP address of the printer in a Web browser. In the **Support** tab, click **Service support** to display the following page.

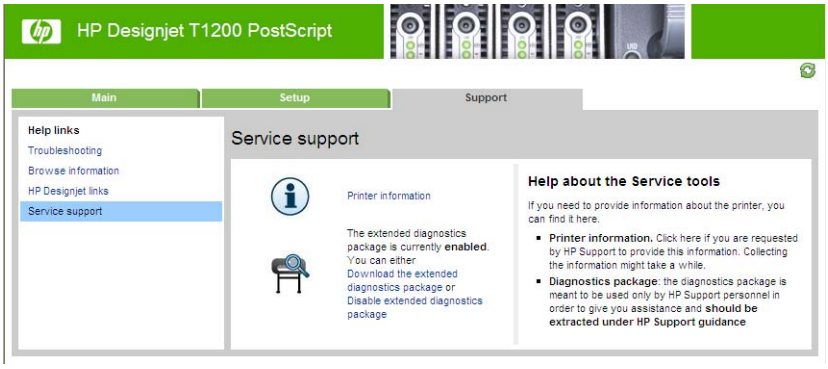

2. If the problem persists and is difficult to debug, try the extended diagnostics package. To enable the extended diagnostics package, click **Enable the extended diagnostics package**. The printer needs to be restarted after enabling or disabling the extended diagnostics package.
3. At any time after enabling the extended diagnostics package, you can download the package and the printer logs by clicking **Download the extended diagnostics package**.
4. When you have finishing using the extended diagnostics package, remember to disable it; otherwise it could affect printer performance or even cause undesirable side-effects.

Retrieving logs without the diagnostic package

This method is recommended only if you are unable to use the diagnostic package for some reason.

1. Turn off the printer with the **Power** key on the front panel.
2. Hold down the **OK** key and the **View information** key at the same time, and turn on the printer with the **Power** key. Continue to hold down all three keys for about 20 seconds, until you see the HP logo on the Front Panel display. This turns on permanent logging: printer logs will be saved instead of being deleted at each restart.
3. After DO NOT REBOOT is displayed, retrieve at least the current printer log from the following URL: http://<IP>/hp/device/3432/8828/tmp/, where <IP> is the IP address of the printer. Click the file once to select it, then right-click and select **Save target as**.
4. The **printer.log** file contains a log of the printer activity since it was last restarted. Previous logs are compressed and stored in .gz files whose names contain the date and time of the printer restart. You may wish to download some of these files as well.

When you do not require permanent logging any more, remember to turn it off, to avoid filling up the hard disk and degrading printer performance. To disable permanent logging:

1. Turn off the printer with the **Power** key on the front panel.
2. Hold down the **OK** key and the **Form feed and cut** key at the same time, and turn on the printer with the **Power** key. Continue to hold down all three keys for about 20 seconds, until you see the HP logo on the Front Panel display. Permanent printer logging is now deactivated.

Appendix D: How to check the display list memory for an HP-GL/2 job

The display list memory is the memory the printer needs to process an HP-GL/2 file.

If the display list memory that the printer needs is greater than the dedicated file processing memory available, the printer will show an out-of-memory message SE 71:04.

Table 2-1 Different memory capacities per printer model

Printer series	Main PCA and Formatter memory	Dedicated file processing memory[1]	Hard disk capacity
T770	384MB	2GB[2]	
T770 HD	384MB	8GB	160GB
T1200/T1200 PS	384MB	32GB	160GB

[1] Dedicated file processing memory is a partition of the internal hard disk that enables file processing. This is the maximum display list memory that an HP-GL/2 job can use.

[2] Can be upgraded to 8GB with the Memory or PostScript Upgrade

Check the display list memory

1. Restart the printer, to clear the previous display list.
2. Send the job that you want to check to the printer.

TIP: You don't need to print the job, the print preview is enough.

3. Generate the diagnostic package using the Embedded Web Server (from the **Support** tab, not the extended diagnostic package).
4. Go to http://IP/hp/device/3432/8828/tmp/pdldir.txt and press F5 till the pdldir.txt file is generated.
5. Sum each row (HPG.0, HPG.1, HPG.X, …) to get the display list memory needed for this job.
   - Each HPG vector can hold 2GB.
   - Each row from HPG.0 to HPG.15 is a vector of dedicated file processing memory.
   - For the T770, only the HPG.0 vector is available (maximum 2GB). For the T770 HD, only vectors HPG.0 to HPG.3 are available. For the T1200, vectors HPG.0 to HPG.15 are available (maximum 32GB)
   - Each row shows units in bytes. See the example below.

NOTE: If the customer has a T770 printer, you can diagnose the out-of-memory issue in your T1200 support unit with this method.

Example

```
total 1480
-rw-rw-rw- 1 root root 10485760 Jan 4 11:09 HPG.0
-rw-rw-rw- 1 root root

0 Jan 4 11:09 HPG.1
-rw-rw-rw- 1 root root 0 Jan 4 11:09 HPG.10
```

-rw-rw-rw- 1 root root 0 Jan 4 11:09 HPG.11
-rw-rw-rw- 1 root root 0 Jan 4 11:09 HPG.12
-rw-rw-rw- 1 root root 0 Jan 4 11:09 HPG.13
-rw-rw-rw- 1 root root 0 Jan 4 11:09 HPG.14
-rw-rw-rw- 1 root root 0 Jan 4 11:09 HPG.15
-rw-rw-rw- 1 root root 0 Jan 4 11:09 HPG.2
-rw-rw-rw- 1 root root 0 Jan 4 11:09 HPG.3
-rw-rw-rw- 1 root root 0 Jan 4 11:09 HPG.4
-rw-rw-rw- 1 root root 0 Jan 4 11:09 HPG.5
-rw-rw-rw- 1 root root 0 Jan 4 11:09 HPG.6
-rw-rw-rw- 1 root root 0 Jan 4 11:09 HPG.7
-rw-rw-rw- 1 root root 0 Jan 4 11:09 HPG.8
-rw-rw-rw- 1 root root 0 Jan 4 11:09 HPG.9

Display list => HPG.0 10485760 bytes

3 Diagnostics Menu

- Introduction
- Diagnostic Tests and Utilities

Introduction

This chapter explains how to use the printer's diagnostic tests and utilities, and what to do in the event of any failure.

NOTE: If possible, always perform a diagnostic test on a component that you are about to replace, to make sure that is the component that has failed. If the test on that component passes, there is no need to replace it.

Initialization Self Test

Initialization sequences

Whenever the printer is switched on, it automatically performs a series of internal self-tests and mechanical initialization sequences. If any part fails, a system error will appear and you should consult System Error Codes on page 53.

Auto-Diagnostics Test

In the event of a paper or scan-axis jam triggering a system error 86:01, the following message will appear on the front panel.

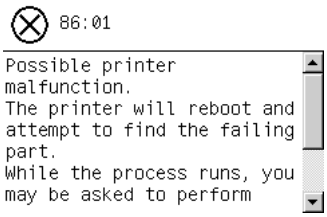

After restarting, the printer will exercise several electromechanical subsystems involved in Paper or Scan Axis movement. If necessary, you may be asked to move the carriage manually or check whether the main roller is moving. You may also be asked to launch an Auto-Diagnostics Test.

- In the event of a paper jam, if another paper jam occurs during the first 15 paper advance movements after the printer restarts, the printer will ask you to launch the Paper Axis Auto-Diagnostics.
- In the event of a scan-axis jam, if another scan-axis jam occurs during the first 50 carriage movements after the printer restarts, the printer will ask you to launch the Scan Axis Auto-Diagnostics.

A final result will be shown with all the collected data.

Phone Support

NOTE: In certain circumstances, a Call Agent can try to troubleshoot the printer by requesting the customer to perform a Service Test over the phone. Using this process, it can be determined whether the printer requires any on-site maintenance.

Remember that the key combination for the customer to enter the Service Tests and Utilities is different from the one that the engineer will use.

Diagnostic Tests and Utilities

The following is a list of all diagnostic test and utilities available in the printer. For instructions on entering the Diagnostics menu, see Entering the Diagnostics Menu on page 96.

+ Scan Axis Test on page 97

    Star-wheel lifter

    PRS

    Scan axis

    Cutter

Paper Drive Test on page 104

Electronics Module Test on page 106

Carriage Assembly Test on page 110

Sensors Test on page 113

Rewinder Test on page 114

+ Ink Delivery System (IDS) Test on page 116

    Ink Delivery System

    Check ink supplies

    Check leakage

+ Service Station Test on page 121

    Service station

    Primer motor

I/O Information Utility on page 124

Unit Information Utility on page 126

EEROM Reset Utility on page 126

Front Panel Lock Reset Utility on page 125

Hard Disk Recovery Utility on page 140

File System Check on page 140

Entering the Diagnostics Menu

1. Make sure the printer is switched off with the **Power** key on the front of the printer and **not** with the power switch on the back of the printer.
2. Press and hold the **Up** and **OK** keys. While holding the **Up** and **OK** keys down, press the **Power** key to turn on the printer, then release it while continuing to hold down the **Up** and **OK** keys. Wait until the HP logo appears in the front-panel display, then release all keys.
3. In the Diagnostics menu, select a diagnostic test with the arrow keys and press the **OK** key to begin the highlighted test.

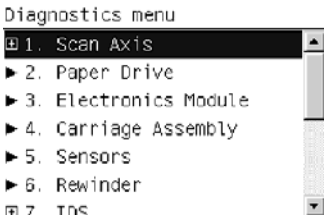

NOTE: The Diagnostic Tests and Utilities work in a special mode that does **not** require the full initialization of the printer. Therefore, whenever you have finished a test, you **must** power off the printer and power on again before trying to print or before executing another test.

NOTE: In some cases a quick press of a button may not be recognized by the printer. When pressing a button, be sure to press it deliberately and all the way to the bottom of its travel.

NOTE: If the printer hangs up during a test, switch the printer off and restart from step 1.

Scan Axis Test

The complete Scan Axis test consists of individual tests for the different components related to the Scan Axis. The subsystems included in this assembly are:

- Star Wheel Lifter
- Automatic PPS Adjustment.
- Scan Axis Servosystem
- Cutter

You must perform the Scan-Axis Test after:

- System Error Code 42:XZ.
- System Error Code 47:XZ.
- System Error Code 73:XZ.
- System Error Code 87:XZ.
- System Error Codes related to Scan-Axis shutdown or Carriage jam.

Diagnostic tests also need to be performed after removing or replacing certain printer components. If you have removed or replaced printer components, check the Service Calibration Guide to Removal and Installation on page 184 to see which tests and calibrations you need to perform.

△ **CAUTION:** ALL THE COVER SENSORS ARE DISABLED WHEN IN THE SERVICE TESTS MENU. IF THE CARRIAGE IS MOVING IT WILL NOT STOP IF THE WINDOW IS OPENED, SO BE VERY CAREFUL NOT TO PUT YOUR HANDS INSIDE.

NOTE: IF POSSIBLE, ALWAYS PERFORM THIS TEST BEFORE REPLACING ANY COMPONENT OF THE SCAN-AXIS.

Star Wheel Lifter test

The Star Wheel Lifter subassembly is designed to move the Star Wheel support to the up and down positions. This is used to load roll or sheet paper and avoid damage to the Star Wheel caused by paper jams etc.

Perform the Scan Axis - Star Wheel Lifter test as follows:

NOTE: Perform this test with the Printheads and the Tubes System installed in order to get values that can be compared correctly.

1. In the Diagnostics menu, scroll to **Scan Axis** and press **OK.**

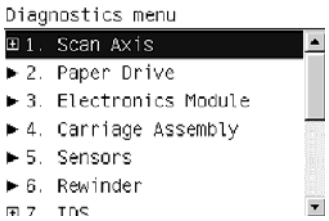

2. The Front Panel will show the **Scan Axis** submenu.

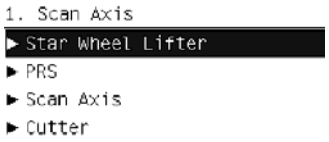

3. In the **Scan Axis** submenu, scroll to **Star Wheel Lifter** and press **OK** to start the test.

   If there is a failure at any point during the tests, the Front Panel will display the relevant **System Error Code**. To troubleshoot any displayed error codes, see System Error Codes—Full Descriptions on page 58.

4. The printer then starts the Star wheel lifter PWM control test to check the subsystem. As the test executes the Front Panel displays the following messages:

   - Initializing
   - Checking movement
   - Testing…
   - Getting information
   - Checking Status

5. The printer displays the test results and prompts you to continue

6. Press **OK** to continue. Once you continue the test, the Front Panel displays the following messages:

   - Checking motors
   - Checking movement
   - Getting data

- Analyzing
- Checking status
- Checking motor
- Checking movement
- Checking motor data
- Analyzing
- Checking Status

If there is a failure at any point during the test, the Front Panel will display the relevant **System Error Code.** To troubleshoot any displayed error codes, see System Error Codes—Full Descriptions on page 58.

7. The Front Panel shows the test complete display for a few seconds.

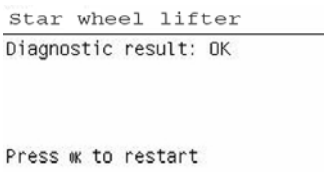

8. Press **OK** to end the test and restart the printer.

PRS Test

The PRS subsystem is designed to move the carriage assembly between two predetermined vertical positions with respect to the plane of the print platen. This allows different papers of different thicknesses to be used without losing print quality.

Perform the Scan Axis - PRS test as follows.

NOTE: Perform this test with the Printheads and the Tubes System installed in order to get values that can be compared correctly.

1. In the Diagnostics menu, scroll to **Scan Axis** and press **OK.**

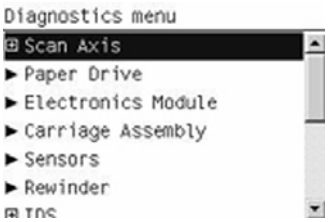

2. The Front Panel will show the **Scan Axis** submenu.

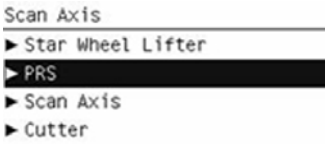

3. In the **Scan Axis** submenu, scroll to **PRS** and press **OK** to start the test

   The printer will start the Scan Axis subsystem Common Initialization and PRS test initialization. If there is a failure at any point during the tests, the Front Panel will display the relevant system error code. To troubleshoot any displayed error codes, see System Error Codes—Full Descriptions on page 58.

4. The printer then starts the PRS test to check the subsystem. As the test executes, the Front Panel displays the following messages:

   - Initializing
   - Checking movement

5. Once the test has completed, the Front Panel prompts you to confirm that the PRS moved.

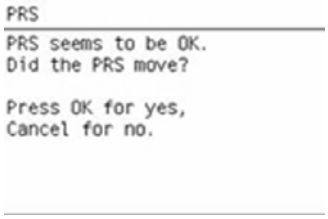

6. If the PRS moved, press **OK** to accept the results. If the PRS did not move, press **Cancel** to reject the results and exit the test.

7. Press **OK** to end the test and restart the printer.

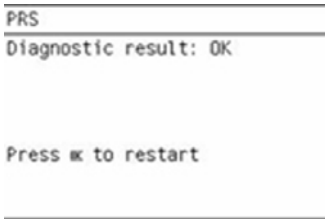

Scan Axis Test

The Scan Axis subsystem is designed to move the carriage assembly between two predetermined horizontal positions with respect to the plane of the print platen. This allows papers of different widths to be used without losing print quality.

Perform the Scan Axis - Scan Axis test as follows:

NOTE: Perform this test with the Printheads and the Tubes System installed in order to get values that can be compared correctly.

1. In the Diagnostics menu, scroll to **Scan Axis** and press **OK.**

2. The Front Panel will show the **Scan Axis** submenu.

3. In the **Scan Axis** submenu, scroll to **Scan Axis** and press **OK** to start the test.
4. The printer starts to check the Scan Axis motor. The Front Panel displays the following messages:
   - Initializing
   - Checking motors
5. Depending on the results of the tests, you may be asked to perform the following operations.
   a. Open the window.

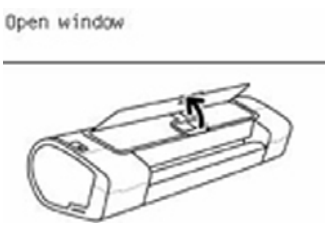

   b. Manually move the carriage to another position. The carriage should not offer resistance to manual movement. Do not force any printer part while moving the carriage. The front panel will show a text describing the action and an animation as an example of the requested operation. Press **OK** when you have finished moving the carriage.

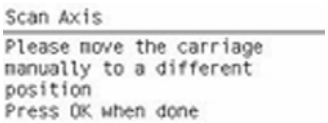

   c. Close the window.

6. Afterwards, the test will automatically continue checking for possible Scan Axis errors. The carriage will move automatically along the Scan Axis several times, taking a few minutes. As the test executes, the Front Panel displays the following messages:

   - Checking paper jam
   - Checking movement
   - Checking life counters status

7. If the Scan Axis passes the test, the Front Panel displays the following message, otherwise it displays an error code. Press **OK** to continue.

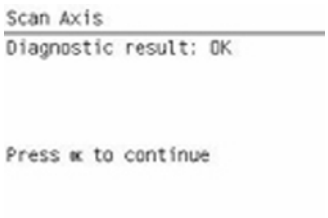

Cutter test

The Cutter is designed to cut roll paper after printing to the defined sheet size. Before executing this test you should run the Scan Axis, Media Drive and Carriage tests to ensure that each of these subsystems is operating correctly.

Perform the Scan Axis - Cutter test as follows.

1. In the Diagnostics menu, scroll to **Scan Axis** and press **OK.**

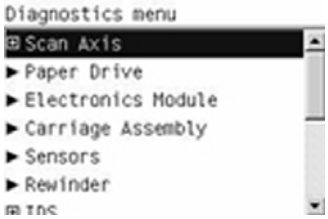

2. The Front Panel will show the **Scan Axis** submenu.

3. In the **Scan Axis** submenu, scroll to Cutter and press **OK** to start the test. The test prompts you to check that all paper is unloaded. Once the paper is unloaded, press **OK**.

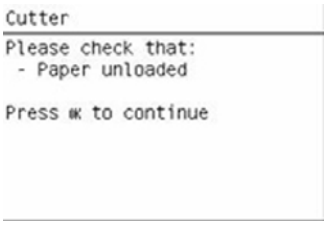

If there is a failure at any point during the tests, the Front Panel will display the relevant system error code. To troubleshoot any displayed error codes, see System Error Codes—Full Descriptions on page 58.

4. The printer prompts you to feed the paper. With the Media Lever lowered, feed roll paper (not a sheet) into the paper path until it reaches the printer roller. Use the upper roll if you have a T1200 series printer. Then press **OK** to continue.

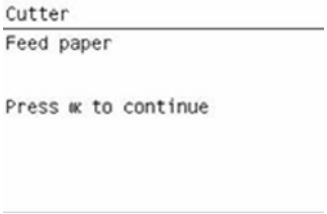

If you have not fed enough paper into the printer, the diagnostic will show a message saying that the paper was not detected. In this case, try again, taking care to feed more paper. If the problem continues, check that the sensors are working correctly. If necessary, perform the Sensors Test (see Sensors Test on page 113).

5. The printer then starts an actual test cut of the paper. As the test executes the Front Panel displays the following messages:

- Advancing paper
- Preparing cutter
- Cutting paper
- Disengaging cutter

6. Once the test has completed the Front Panel displays the test result and prompts you to confirm that the cutter worked.

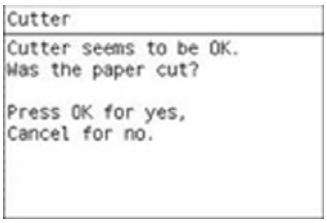

7. Press **OK** if the cutter worked or **Cancel** if the cutter did not work.

8. Press **OK** to end the test and restart the printer.

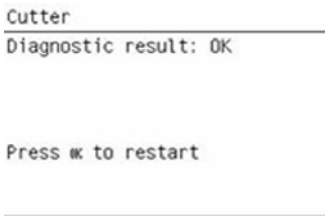

Paper Drive Test

The Paper Drive test diagnoses failures of components of the Paper Axis.

You must perform the Paper Drive Test after:

- System Error Code 81:XZ.
- System Error Code 41:XZ.
- System Error Code 73:XZ.

Diagnostic tests also need to be performed after removing or replacing certain printer components. If you have removed or replaced printer components, check the Service Calibration Guide to Removal and Installation on page 184 to see which tests and calibrations you need to perform.

△ **CAUTION:** ALL THE COVER SENSORS ARE DISABLED WHEN IN THE SERVICE TESTS MENU. IF THE CARRIAGE IS MOVING IT WILL NOT STOP IF THE WINDOW IS OPENED, SO BE VERY CAREFUL NOT TO PUT YOUR HANDS INSIDE.

NOTE: IF POSSIBLE ALWAYS PERFORM THIS TEST BEFORE REPLACING ANY COMPONENT OF THE MEDIA-AXIS.

Perform the Paper Drive test as follows:

NOTE: Perform this test with the Printheads and the Tubes System installed in order to get values that can be compared correctly.

1. In the Diagnostics menu, scroll to **Paper Drive** and press **OK.**

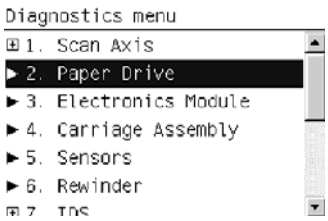

2. The printer starts the Paper Drive test to check the subsystem. As the test executes the Front Panel displays the following messages:
   - Starting Horsburgh and Mips
   - Starting Nvm
   - Starting Tests PWM
   - Starting Tests GPIO
   - Booting up the Carriage

- Starting DelSol1
- Starting Carriage
- Getting Part Number
- Part Number

3. The Front Panel will show information about what it is doing. It will ask you to press **OK** to continue with the process. When prompted, unload paper if any is loaded.

```
Paper Drive
Initializing
Getting information
Getting information
Press OK to continue
Programming slow PWM paper
Please unload the paper
Press OK to continue
```

4. The Front Panel then displays the Analog Encoder calibration results.

```
Paper Drive
Calibrating analog encoder
Diagnostic result:
   A        2.0      2.0
   B        2.0      8.0

Press OK to continue
Press X to reject
```

The GAIN for channels A and B should be lower than 5.

5. If the results are correct, press **OK** to accept the results. If the results are not correct, press **Cancel** to reject the results and fail the test.
6. If you accept the results, the front panel will continue with the tests. It will ask you to press **OK** to continue with the process. When prompted, unload paper if any is loaded.
7. The Front Panel then displays the test results.

```
Paper Drive
PWM avg: 8285.19 / 8424.90
Speed error: 30.25 / 26.25
PWM StDev: 110.48 / 118.65
PWM max: 8479.00 / 8834.00

Press OK to continue
Press X to reject
```

- The first PWM avg result (forward move) should be between 7700 and 10560 and the second Pwm avg (backward move) between 7600 and 10450.
- The first Speed error result should be no more than 78.65 and the second no more than 112.5.
- The first PWM StDev result should be no more than 162.5 and the second no more than 187.5.
- The first PWM max result should be no more than 12250 and the second no more than 12125.

8. If the results are correct, press **OK** to accept the results. If the results are not correct, press **Back/Cancel** to reject the results and FAIL the test.

9. If you accept the results, the Front Panel shows the test complete display for a few seconds:

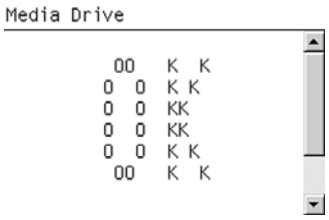

10. The Front Panel prompts you to shut down the printer to complete the test.

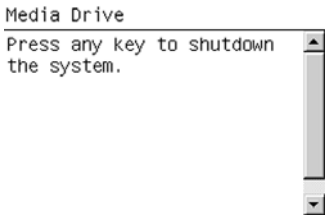

11. Press any key to shut down the printer.

Electronics Module Test

The Electronics Module test diagnoses failures of the following components:

- Power Supply
- Formatter
- Engine Board
- Plotter Information

Diagnostic tests also need to be performed after removing or replacing certain printer components. If you have removed or replaced printer components, check the Service Calibration Guide to Removal and Installation on page 184 to see which tests and calibrations you need to perform.

Perform the Electronics Module test as follows:

1. In the Diagnostics menu, scroll to **Electronics Module** and press **OK.**

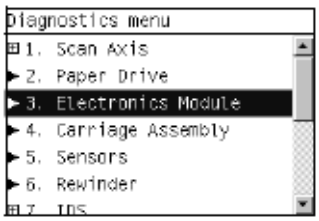

2. The printer starts the Electronics Module test and displays the following messages:
   - Initializing

3. The printer starts the Electronics Module test to check the subsystem and prompts you to test the Power Supply:

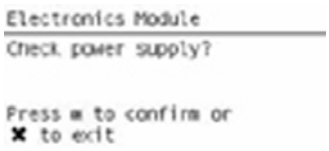

4. Press **OK** to the test the Power Supply. If you do not wish to test the power supply use the **Arrow** keys to select NO and press **OK.**
5. The Power supply test starts and the Front Panel displays the following messages:
   - Getting information
6. The Front Panel displays the Power Supply test results.

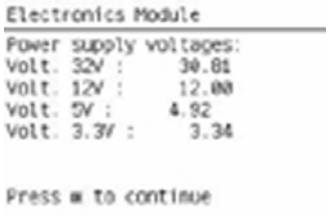

7. Press **OK** to continue.
8. The Front Panel displays more Power Supply test results.

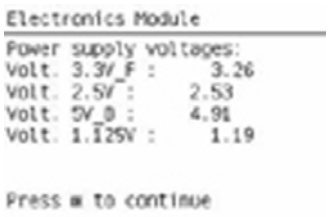

9. Press **OK** to continue.
10. The Fan Speed test starts and the Front Panel displays:
    - Getting information
11. The Front Panel then displays the Fan Speed test result.

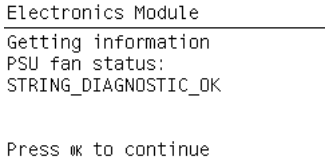

12. Press **OK** to continue.

13. The Front Panel then prompts you to test the Formatter.

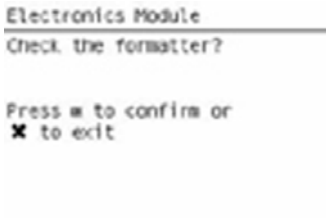

14. Press **OK** to test the Formatter voltage. If you do not wish to test the Formatter voltage, use the **Arrow** keys to select NO and press **OK.**
15. The Formatter voltage test starts and the Front Panel displays the following messages:
    - Getting information
16. The Front Panel then displays the Formatter voltage test result.

17. Press **OK** to continue.
18. The Formatter memory size test starts and the Front Panel displays the following messages:
    - Getting information
19. The Front Panel then displays the Formatter memory size.

20. Press **OK** to continue.
21. The Formatter hard disk test starts and the Front Panel displays the following messages:
    - Getting information
22. The Front Panel then displays Formatter Hard Disk information test results.

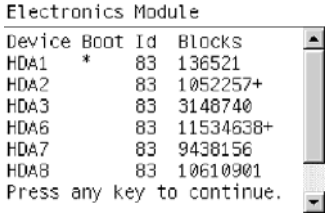

23. Press any key to continue.

24. The Formatter hard disk file information test starts and the Front Panel displays the following messages:

    - Getting information

25. The Front Panel then displays Formatter Hard Disk File information test results.

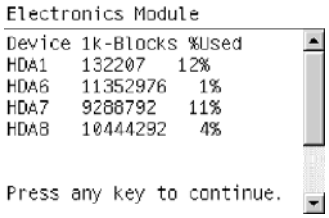

26. Press any key to continue.

27. The Main Memory Size test starts and the Front Panel displays the following messages:

    - Getting Main Memory Size.

28. The Front Panel then displays Main Memory size test results.

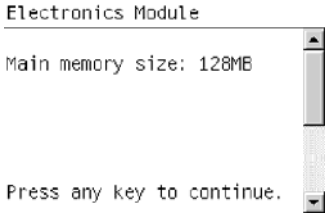

29. Press any key to continue.

30. The Front Panel then prompts you to test the Formatter Communications.

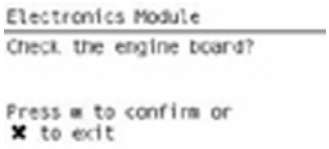

31. Press **OK** to test the Formatter. If you do not wish to test the Formatter use the **Arrow** keys to select NO and press **OK.**

32. The Formatter Communications test starts and the Front Panel displays the following messages:

    - Starting Micci2Bus.
    - Starting Micci2BusProxy.
    - Checking Communications.

33. The Front Panel then displays Formatter Communications test results.

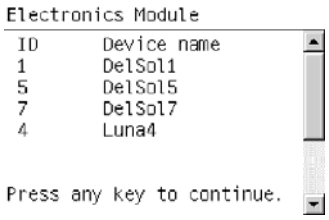

34. Press any key to continue.

35. The Front Panel then prompts you to check the Plotter Information.

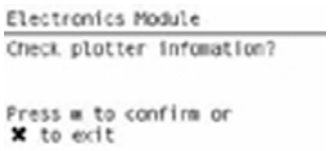

36. Press **OK** to check the Plotter Information. If you do not wish to test the Plotter Information use the **Arrow** keys to select **NO** and press **OK.**

37. The Plotter information test starts and the Front Panel displays the following messages:

    - Getting information

38. If the test is successful, the Front Panel displays the following message.

39. Press **OK** to end the test and restart the printer.

Carriage Assembly Test

The Carriage Assembly test diagnoses failures of any components of the Carriage. This test should be run in any of the following circumstances.

- Before replacing the Carriage Assembly.
- After removing or replacing certain printer components. If you have removed or replaced printer components, check the Service Calibration Guide to Removal and Installation on page 184 to see which tests and calibrations you need to perform.
- If printhead alignment fails repeatedly.
- If, when loading paper, the search for the edge of the paper fails repeatedly.
- If no printheads are detected (check more than one).
- If the system error message 02.1:10 appears.

If an error is detected during the test, the Front Panel will display an error code and message. The test will not continue after that point.

1. In the Diagnostics menu, scroll to **Carriage Assembly** and press **OK**.

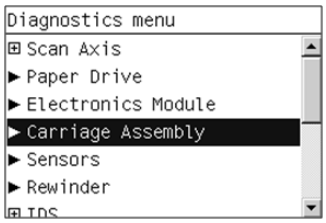

2. The test starts and the Front Panel displays the following messages:
   - Initializing
   - Getting information
   - Checking voltages
3. It will then display the actual values of various parameters, together with their permitted (valid) range. In each case, press **OK** to continue with the test.
4. Partway through the test, the Front Panel asks you to remove the printheads.

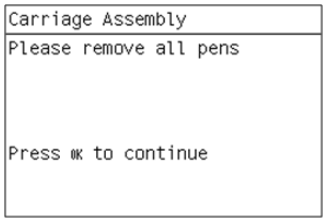

5. Open the Window.
6. Open the Carriage Cover.
7. Remove all the printheads from the Carriage.
8. Close the Carriage Cover.
9. Close the Window.
10. Press **OK** to continue.

NOTE: If the Front Panel reports that a printhead is still detected in the printer, remove the printhead. If you are sure that you have already removed all the printheads, press **Cancel** to continue the test.

11. The test continues, displaying the values and valid ranges of some more parameters.
12. The Front Panel then prompts you to load roll paper.

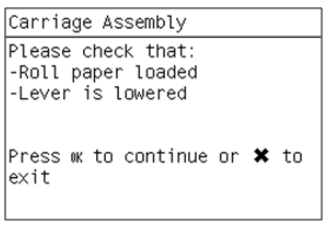

13. Load roll paper.

NOTE: For the LED test to work properly, the paper must be loaded completely through the carriage path.

14. Press **OK** to continue or **Cancel** to exit.

15. The printer tests the carriage LEDs and sensors, which may take a few minutes.

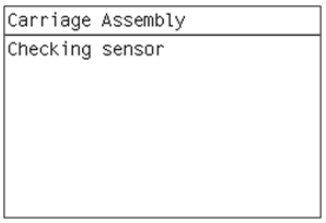

16. The Front Panel then asks you to re-insert all the printheads that you removed earlier.

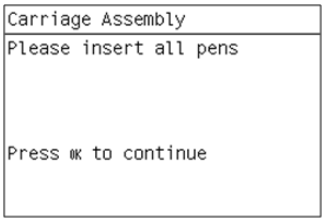

17. Open the Window.

18. Open the Carriage Cover.

19. Insert all the printheads.

20. Close the Carriage Cover.

21. Close the Window.

22. Press **OK** to continue.

NOTE: If the Front Panel reports that a printhead is not detected in the printer, insert the printhead. If you are sure that you have already inserted all the printheads, press **Cancel** to continue the test.

23. The printer makes some further checks. If all is well, the Front Panel displays the following message.

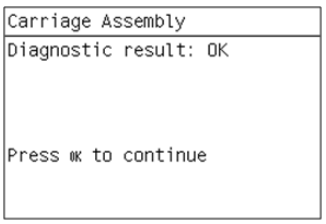

24. Press **OK** to end the test.

Sensors Test

The Sensors test diagnoses failures of any sensors of the printer. Always run this test before replacing any of the following sensors:

- Window sensor
- Media Lever position sensor
- Media sensor
- Upper or lower roll cover sensor (only for T1200 series)
- Single-sheet sensor

Diagnostic tests also need to be performed after removing or replacing certain printer components. If you have removed or replaced printer components, check the Service Calibration Guide to Removal and Installation on page 184 to see which tests and calibrations you need to perform.

1. In the Diagnostics menu, scroll to **Sensors** and press **OK.**

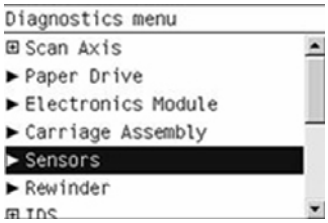

2. The Sensors test starts and the Front Panel prompts you to check default sensor positions. For the T770 series, the cover sensors are not present and not tested.

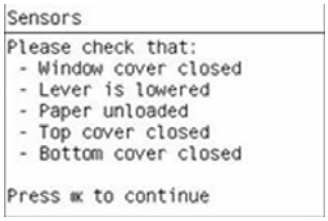

Check that the sensors are in the default positions and press **OK** to continue.

NOTE: If the printer detects any sensor in a position that is not expected, a message will be shown. If the sensor is in the correct position, there must be a problem with the sensor (for example, the window is closed but the message indicates that it is not closed); in this case, replace the faulty sensor.

3. The Window sensor test starts and the Front Panel prompts you to open the Window.

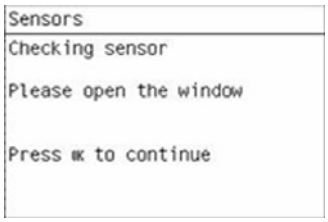

Open the Window and press **OK** to continue.

NOTE: Make sure that no object is interfering with the window sensor.

4. The Front Panel prompts you to close the Window.

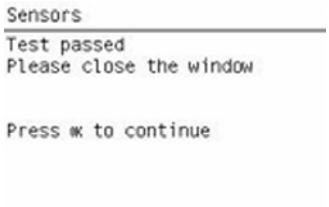

Close the Window and press **OK** to continue.

5. Follow the same procedure for the Pinchwheel Lever Sensor, the Media Sensor, and the Roll Covers (T1200 series only).

To test the Media Sensor, you will have to feed paper into the printer until it reaches the sensor.

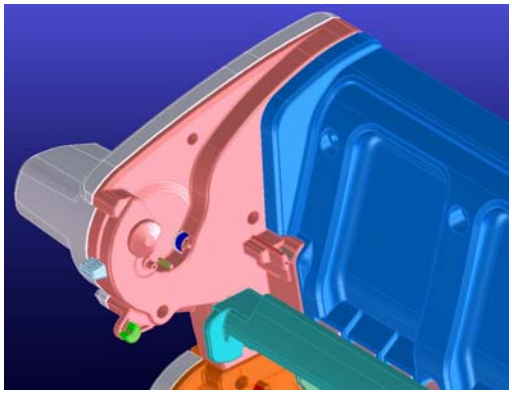

6. Eventually, the Front Panel asks you to remove the paper.

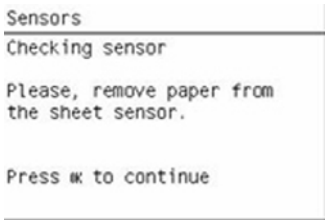

When you have removed the paper, press **OK** to continue.

7. The Front Panel may ask you to reinsert the paper.

8. When the tests are complete, the Front Panel displays a final message. Press **OK** to continue.

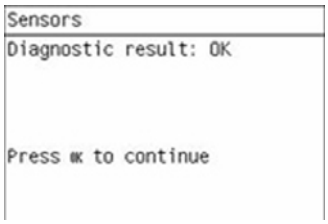

Rewinder Test

The Rewinder test diagnoses failures of the Rewinder located in the Paper Path Assemblies (Rear). Always run this test before replacing the Right Roll Support.

Perform this test after:

- System Error Code 41:YZ
- System Error Code 45:YZ
- System Error Code 81:YZ

Diagnostic tests also need to be performed after removing or replacing certain printer components. If you have removed or replaced printer components, check the Service Calibration Guide to Removal and Installation on page 184 to see which tests and calibrations you need to perform.

NOTE: Perform this test with the Printheads and the Tubes System installed in order to get values that can be compared correctly.

CAUTION: ALL THE COVER SENSORS ARE DISABLED WHEN IN THE DIAGNOSTICS MENU. IF THE CARRIAGE IS MOVING IT WILL NOT STOP IF THE WINDOW IS OPENED, SO BE VERY CAREFUL NOT TO PUT YOUR HANDS INSIDE.

1. In the Diagnostics menu, scroll to **Rewinder** and press **OK.**

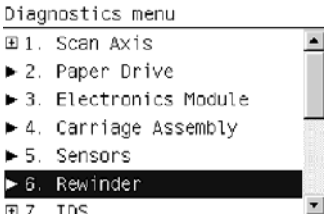

The printer will start the Open Loop, Rewinder Servo System, and Media Driver PWM tests.

If there is a failure at any point during the tests, the Front Panel will display the relevant **System Error Code**. To troubleshoot any displayed error codes, see System Error Codes—Full Descriptions on page 58.

2. The Rewinder test starts and the front panel displays the following messages:
   - Initializing
   - Getting information
   - Part Number: P/N
   - Setting encoder position
3. The Front Panel prompts you to make sure the paper is unloaded and the spindle is removed.

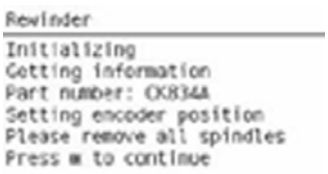

4. Remove the paper from the printer.
5. Remove the spindles from the roll supports.
6. Press **OK** to continue.

7. The Front Panel displays the results.

8. The front panel displays the test results. Press **OK** to end the test and restart the printer.

NOTE: Once you have completed the Rewinder diagnostic test, you must perform a Paper Advance Calibration. Paper Advance Calibration on page 148.

Ink Delivery System (IDS) Test

The complete Ink Delivery System test consists of three individual tests for the different components related to this subsystem. These three tests and their associated functions are:

- Ink Delivery System
  - Check the Ink Supply Station subsystem.
  - Show tubes usage (as a percentage of expected life).
  - Test communication with Ink Supplies.
- Check Ink Supplies
  - Test communication with Ink Supplies.
  - Show ink levels.
  - Check that Ink Supplies are ready for purging: the remaining ink is enough for the setup process and the ink supply is not faulty.
- Check Leakage
  - Check the Ink Supply Station subsystem.
  - Check for ink supplies or tubes leakage.

Diagnostic tests also need to be performed after removing or replacing certain printer components. If you have removed or replaced printer components, check the Service Calibration Guide to Removal and Installation on page 184 to see which tests and calibrations you need to perform

Ink Delivery System

If there is a failure at any point during the tests, the Front Panel will display the relevant **System Error Code**. To troubleshoot any displayed error codes, see System Error Codes—Full Descriptions on page 58.

1. In the Diagnostics menu, scroll to **IDS** and press **OK** .

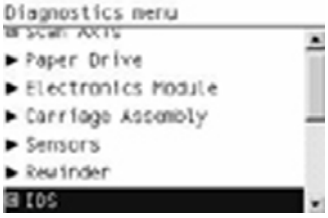

2. The Front Panel shows the **IDS** submenu.

3. In the **IDS** submenu, scroll to **Ink Delivery System** and press **OK** to start the test.
4. The Ink Delivery System test starts and the Front Panel prompts you to remove all the Ink Supplies.

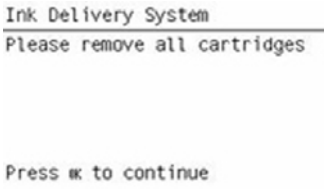

5. Remove all the Ink Cartridges.
6. Press **OK** to continue.
7. The Front Panel then prompts you push down Piston 0.

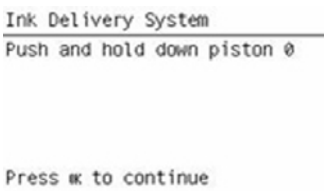

8. Press and hold down Piston 0, which is located at the furthest left Ink Cartridge position.
9. Press **OK**.

10. The Front Panel then prompts you to release Piston 0.

```
Ink Delivery System
Release piston



Press OK to continue
```

11. Release Piston 0.
12. Press **OK** to continue.
13. Repeat the steps above for each piston.
14. The Front Panel then displays the tubes usage, expressed in percentage of the expected subsystem life.

```
Ink Delivery System
Tubes usage: 2%



Press OK to continue
```

15. Press **OK** to continue.
16. The Front Panel prompts you to insert all the Ink Cartridges.

```
Ink Delivery System
Please insert all cartridges



Press OK to continue
```

17. Install all the Ink Cartridges.
18. Press **OK** to continue.
19. The Front Panel then displays Acumen Supplies test results.

```
Ink Delivery System
Diagnostic result: OK



Press OK to continue
```

20. Press **OK** to end the test and return to the Diagnostics menu.

Check Ink Supplies

If there is a failure at any point during the tests, the Front Panel will display the relevant **System Error Code**. To troubleshoot any displayed error codes, see System Error Codes—Full Descriptions on page 58.

1. In the Diagnostics menu, scroll to **IDS** and press **OK.**

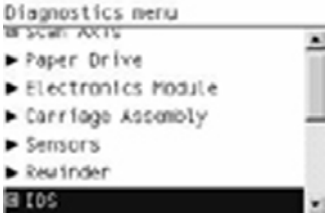

2. The Front Panel shows the **IDS** submenu.

3. In the **IDS** submenu, scroll to **Check Ink Supplies** and press **OK** to start the test.
4. The front panel prompts you to insert all the ink cartridges.

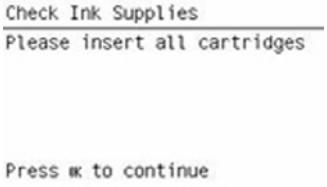

5. The Front Panel shows the ink levels of all the cartridges. A list of the “colors not valid” for purge are shown below. If all of the cartridges are valid for purging, the “Colors not valid” item will not be shown on the Front Panel.

6. Press **OK** to exit.

7. The Front Panel then displays the test results.

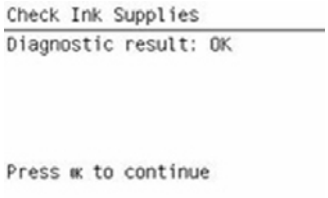

8. Press OK to end the test and return to the Diagnostics menu.

Check Leakage

If there is a failure at any point during the tests, the Front Panel will display the relevant **System Error Code**. To troubleshoot any displayed error codes, see System Error Codes—Full Descriptions on page 58.

1. In the Diagnostics menu, scroll to **IDS** and press **OK.**

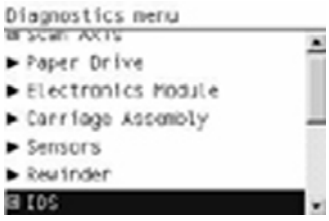

2. In the **IDS** submenu, scroll to **Check Leakage** and press **OK** to start the test.
3. The Ink Delivery System test starts and the front panel prompts you to remove all the Ink Cartridges.

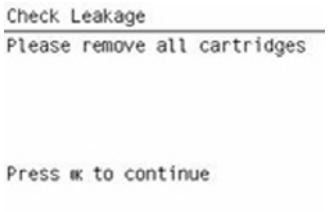

4. Remove all the Ink Cartridges and press **OK** to continue.
5. The front panel prompts you to push down all the pistons.

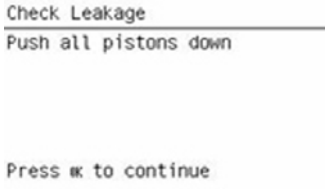

6. Use your finger to push all of the pistons down, and press **OK** to continue.

7. If the Ink Supply Station is working properly, the Front Panel prompts you to insert all the Ink Cartridges.

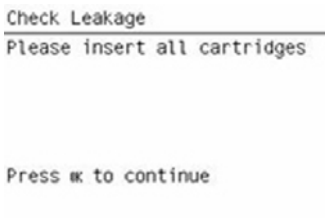

8. Install all the Ink Cartridges and press **OK** to continue.
9. The leakage check starts and the front panel displays the remaining time until the leakage check is finished.

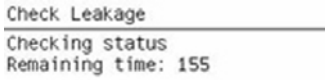

10. The Front Panel then displays Check Leakage test results.

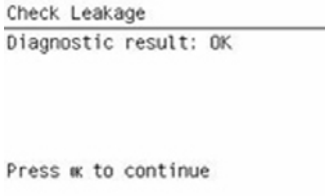

11. Press **OK** to end the test and return to the Diagnostics menu.

Service Station Test

The complete Service Station test consists of individual tests for the different components related to this subsystem.

These tests are:

- Service Station
- Primer Motor

Diagnostic tests also need to be performed after removing or replacing certain printer components. If you have removed or replaced printer components, check the Service Calibration Guide to Removal and Installation on page 184 to see which tests and calibrations you need to perform.

Service station

1. In the Diagnostics menu, scroll to **Service Station** and press **OK.**

2. The Front Panel will show the **Service Station** submenu.

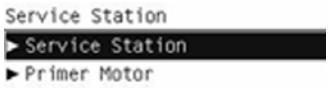

3. In the **Service Station** submenu, scroll to **Service Station** and press **OK** to start the test.
4. The Front Panel then prompts you to check the status of the printer.

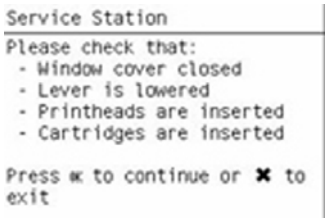

5. Check that:
   - The Window is closed.
   - The Media Lever is lowered.
   - All Printheads are inserted.
   - Valid Cartridges are inserted.
6. Press **OK** to continue.
7. The printer performs a series of movements numbered from 1 to 10. It takes about a minute to perform all movements.

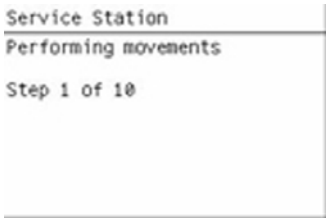

8. The Front Panel then asks if you want to cap the printheads.

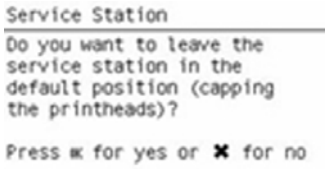

9. Press **OK** to cap the Service Station or **Cancel** to skip this test.

10. The Front Panel prompts you to shut down the printer to complete the test.

11. Press **OK** to shut down the printer.

TIP: If a system error message appears during the above procedure, follow the procedure described in the System Errors section. A system error 21 indicates that the service station is not working properly.

Primer motor

1. In the Diagnostics menu, scroll to **Service Station** and press **OK.**

2. The Front Panel will show the **Service Station** submenu.

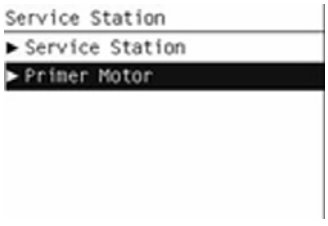

3. In the **Service Station** submenu, scroll to **Primer Motor** and press **OK** to start the test.

4. The Front Panel then prompts you to check the status of the printer.

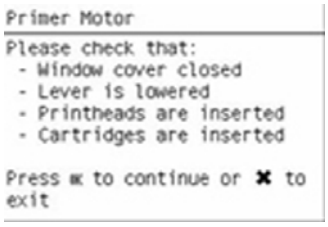

5. Check that:
   - The Window is closed.
   - The Media Lever is lowered.
   - All Printheads are inserted.
   - Valid Cartridges are inserted.
6. The printer performs two movements. Then a screen is shown where the zero position sensor is checked. It is a sensor that detects when the primer is in the zero position. The initial value for the sensor is shown. Then the primer motor is moved until a changed is shown in current value.

7. The printer performs a series of movements to test the primer.

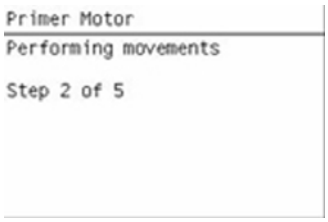

8. If the test passes, the printer purges the tubes. This process takes about a minute.

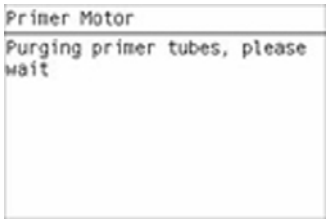

9. The Front Panel prompts you to shut down the printer to complete the test.

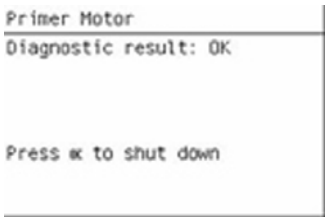

10. Press **OK** to shut down the printer.

I/O Information Utility

The I/O Information utility retrieves the TCP/IP Network configuration parameters from the printer.

NOTE: In some cases, particularly after resetting the printer to factory defaults, it may take as long as 5 minutes to obtain an IP configuration.

1. In the Diagnostics menu, scroll to **I/O Information** and press **OK.**

2. The Front Panel displays the I/O Information.

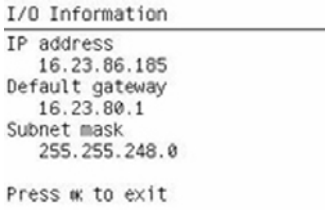

3. Press **OK** to finish.

Front Panel Lock Reset Utility

This utility enables the front panel to be unlocked when it has been locked by mistake and cannot be remotely unlocked from Web JetAdmin.

1. In the Diagnostics menu, scroll to **Front panel lock reset** and press **OK**

.

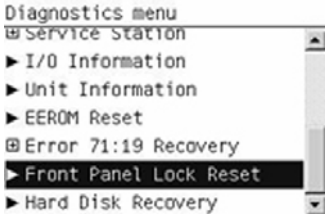

2. The Front Panel prompts you to unlock front panel access. Press **OK** to unlock access or **Cancel** to exit.

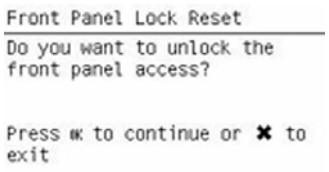

3. The Front Panel lock is reset. Press **OK** to end the utility and return to the main menu.

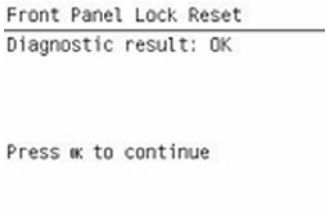

Unit Information Utility

1. The Unit Information test retrieves the Firmware Version, Serial Number and Part Number of the printer.
2. In the Diagnostics menu, scroll to **Unit Information** and press **OK**.

3. The Unit Information test starts and the Front Panel displays the following message:
   - Initializing
   - Getting information
4. The Front Panel shows the result of the test.

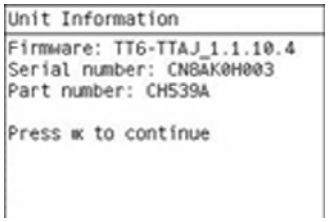

5. Press **OK** to continue and return to the menu.

EEROM Reset Utility

The EEROM Reset test resets the printer to the factory defaults and delete any user information/files.

1. In the Diagnostics menu, scroll to **EEROM** and press **OK.**

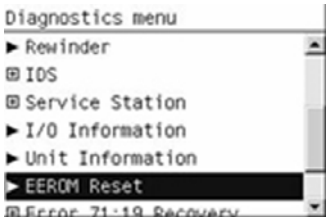

2. The EEROM Reset test starts and the Front Panel asks whether you want to continue.

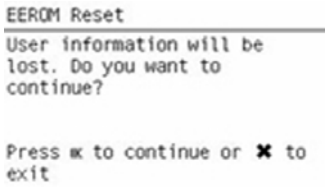

3. Press **OK** to continue the test or **Cancel** to cancel it.
4. The EEROM Reset test continues and the Front Panel displays the following message:
   - Initializing
   - Setting default configuration
5. The Front Panel prompts you to shut down the printer to complete the test.

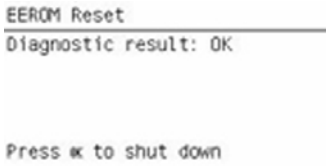

6. Press **OK** to shut down the printer.

4 Service Menu

- Introduction
- Service Utilities
- Service Calibrations

Introduction

This chapter explains the printer's internal Service Utilities and Calibrations, available from the Service Menu.

Service Utilities

The following is a list of all internal Service Utilities available in the printer. To access them, see Entering the Service Utilities Menu on page 130.

Turn Drive Roller on page 130

Purge Tubes on page 132

+ Reset Life Counters on page 133

    + Reset Maintenance Kit usage

        Reset life counters PMK1

        Reset life counters PMK2

    Reset usage counters

+ Diagnostic Print on page 135

    Image Quality Service Best

    Image Quality Service Normal

    + Advanced Diagnostic Print

        Paper advance

        Printhead alignment

        Nozzle health

        Force drop detection

Set Date and Time on page 135

Enable/Disable Firewall on page 137

Enable/Disable Sleep Mode on page 137

+ Disk Wipe DoD 5220.220M on page 138

    + Sanity level

        Insecure mode

        1-pass mode

        5-pass mode

    Disk Wipe (DOD 5220.220M)

Hard Disk Recovery Utility on page 140

File System Check on page 140

SNMP Language Write Access on page 141

I/O Tests on page 141

Show/Hide Front Panel Information on page 142

Enable/Disable Port 280 on page 143

+ Rewinder Adjust on page 144

Adjust Rewinder 1

Adjust Rewinder 2

Disable Upper Roll Cover (T1200 series only) on page 144

Enable Upper Roll Cover (T1200 series only) on page 145

Special Cutter Mode on page 146

Entering the Service Utilities Menu

1. Press the **Menu** key on the front panel. For information regarding the front panel keys, see Using the Front Panel on page 2.

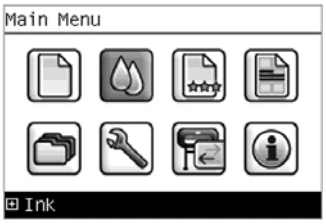

2. From the main menu, customers can execute certain service utilities from the Service Tools menu by pressing the **Down** key and the **Cancel** key together.

   Alternatively, engineers can execute all service utilities from the Service menu by pressing the **Up** arrow key and the **Cancel** key together.

3. From the Service menu, select **Service utilities** and press the **OK** key.

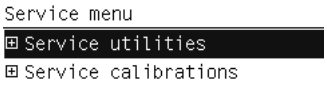

4. From the Service Utilities menu, you can select any of the available utilities, and press the **OK** key to begin the highlighted operation.

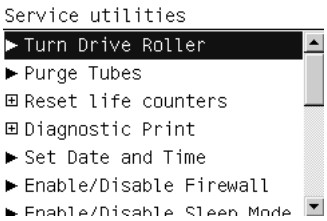

NOTE: If the printer is not used for 135 seconds, the printer exits the Service Utilities menu and you must repeat the above steps to re-enter the menu.

NOTE: In some cases a quick press of a key may not be recognized by the printer. When pressing a key, be sure to press it deliberately and all the way to the bottom of its travel.

Turn Drive Roller

The purpose of this Service Utility is to rotate the Drive Roller and the Overdrive in order to clean them.

NOTE: REMOVE THE MEDIA BEFORE PERFORMING THIS OPERATION.

NOTE: BEFORE PERFORMING THIS SERVICE UTILITY, OPEN THE WINDOW. WITH A FOLDED PIECE OF PAPER, ACTIVATE THE MECHANICAL WINDOW SENSOR. THE PAPER SHOULD FIT TIGHTLY SO IT DOES NOT FALL INTO THE SENSOR.

Perform the Turn Drive Roller utility as follows:

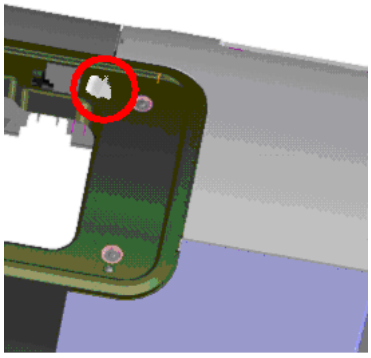

1. In the Service Utilities submenu, scroll to **Turn Drive Roller** and press **OK.**

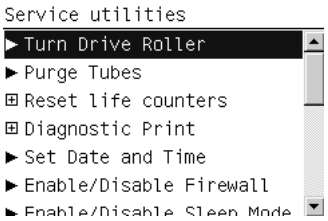

2. The test begins and the Front Panel displays the following message:
   - Checking Media Presence Sensor
3. If paper is loaded, the service utility will be cancelled. In this case, unload the paper and start again from **step 1**. If no paper is loaded, the test will continue.
4. The Drive Roller begins to turn slowly and the following message is displayed on the Front Panel:

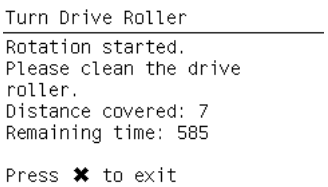

5. To clean the drive roller and overdrive, see Cleaning the Drive Roller and Overdrive on page 401.
6. Once you have finished cleaning the Drive Roller and the Overdrive, press the **Cancel** key to stop the roller.

NOTE: REMEMBER TO REMOVE THE PIECE OF PAPER FROM THE WINDOW SENSOR BEFORE CLOSING THE WINDOW AS THIS COULD DAMAGE THE WINDOW AND THE SENSOR.

Purge Tubes

The purpose of this Service Utility is to Prime the Tubes when the Ink Tubes are **not** new and they need to be re-primed or automatic priming was not completed correctly.

NOTE: Make sure that NEW Ink Cartridges are installed or that the ink volume remaining in the Ink cartridges is below 88% before starting to prime the tubes. If you do not comply, you will get a warning message and cannot finish the test.

NOTE: Before using the Purge Tubes utility, you must insert the dummy printheads using the Change Printheads procedure.

Once you have inserted the dummy printheads using the Change Printheads procedure, perform the Purge Tubes utility as follows:

1. In the Service Utilities submenu, scroll to Purge Tubes and press **OK.**

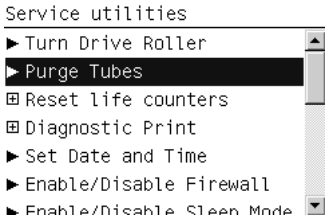

2. The Front Panel prompts you to confirm that the dummy printheads are correctly inserted. If the dummy printheads are correctly inserted, press **OK.**

NOTE: If you have not inserted the dummy printheads, press BACK or CANCEL to exit the test. Insert the dummy printheads using the Change Printheads procedure.

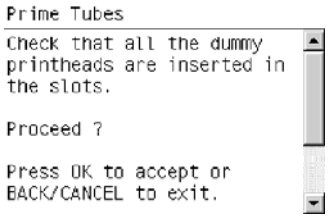

3. The Front Panel displays a message to say the printer is going to reboot.

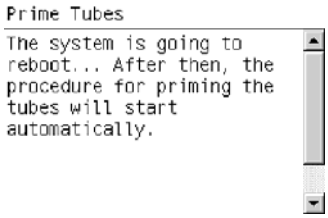

4. Once the tubes system has been purged, the following message will instruct you to open the Window and the carriage to access the printheads:

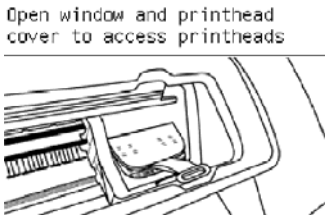

5. Once you have opened the carriage cover, the Front Panel prompts you to check that the Setup Printheads contain ink. If the Ink Supply Tubes have been primed correctly, the windows will contain ink. If the windows on top of each Setup Printhead do **not** contain ink, then you may need to repeat the Prime Tubes process from the beginning.

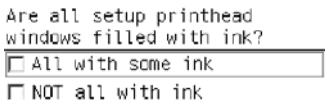

6. If all the Setup Printheads contain ink, select **All with some ink**. If one or more of the Setup Printheads do **not** contain ink, select **Not all with ink.**

7. The Front Panel then prompts you to remove the Setup Printheads and install the Printheads.

8. Remove **all** the Setup Printheads from the Carriage and install the previously removed Printheads.

9. Once **all** the Printheads are installed, the Front Panel will instruct you to close the Carriage cover and close the Window.

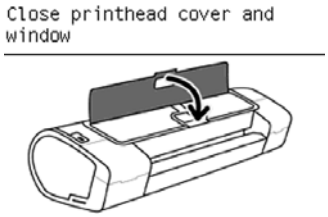

10. The printer will now perform the Printhead Alignment and Front Panel will prompt you to continue with the Printhead Alignment, select **Align now** and press the **OK** key.

11. Once the Printhead Alignment is completed, the following message will be displayed on the Front Panel. Press the **OK** key to continue.

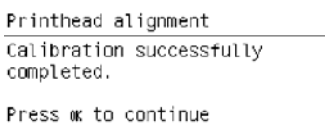

Reset Life Counters

The purpose of this Service Utility is to reset the internal life counters.

There are two submenus that allow you to:

- Reset **all** the counters related to a Preventive Maintenance Kit (PMK).
- Reset only the counters related to a specific replaced part.

NOTE: ALWAYS RESET THE LIFE COUNTER OF A CORRESPONDING PART AFTER REPLACING IT.

Perform the Reset Life Counters utility as follows:

1. In the Service Utilities submenu, scroll to **Reset Life Counters** and press **OK**.

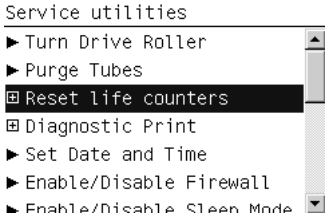

2. Select **Reset Maintenance Kit usage** to reset the Life Counter for **all** parts included in a Preventative Maintenance Kit (PMK).

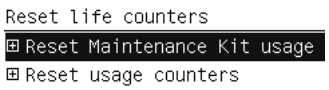

You can choose from the following Preventive Maintenance Kits:

- Preventive Maintenance Kit 1 (PMK1). See Preventive Maintenance Kit #1 for 44-in models (CH538-67024) on page 406.
- Preventive Maintenance Kit 2 (PMK2). See Preventive Maintenance Kit #2 (CH538-67040) on page 407.

NOTE: For more information about the counters that are reset, See Preventive Maintenance on page 400.

It is also advisable to check the status of the Life Counters related to the other Preventive Maintenance Kits to avoid multiple trips to the customer.

3. Select **Reset usage counters** to reset the Life Counter of a single part.

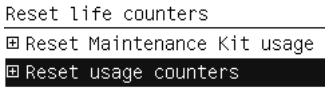

- Tubes and Trailing Cable
- Scan-Axis Belt
- Scan-Axis Motor
- Left Spittoon
- Right Spittoon
- Full Bleed Foams
- Carriage
- Service Station

If you replace a part, you should reset the Life Counters as follows:

Replaced part	Reset Life Counters
Scan-axis motor SV	Scan-Axis Motor
Belt assembly SV	Scan-Axis Belt
Carriage assembly SV	Carriage
Ink supply tubes SV (with trailing cables)	Tubes and Trailing Cable
Service station SV	Right Spittoon & Service Station

4. Once you have selected the Life Counters to reset, a message similar to the following will be displayed on the Front Panel. Press the **OK** key to reset the selected Life Counters or press **Cancel** to exit without resetting the Life Counters.

Example 1:

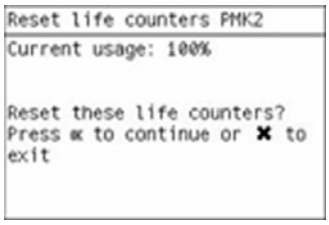

Example 2:

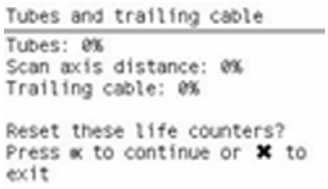

Diagnostic Print

The purpose of this Service Utility is to print the Diagnostic Print in order to identify Print Quality problems. Information regarding the Diagnostic Print is located in Chapter 6, Print Quality. Specifically:

- The procedure to make a Diagnostic Print can be found at The Service Image Quality Diagnostic Print on page 7.
- The procedure to make an Advanced Diagnostic Print can be found at The Advanced Diagnostic Prints on page 12.
- Additional print quality information such as troubleshooting and corrective measures can be found at Print-quality troubleshooting actions on page 6.

Set Date and Time

The purpose of this Service Utility is to set the internal clock of the printer.

Perform the Set Date and Time utility as follows:

1. In the Service Utilities submenu, scroll to **Set Date and Time** and press **OK.**

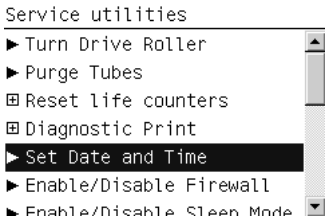

2. The printer will display the current time and the new time. Use the **Up** and **Down** keys to go through the digits and press the **OK** key to go to the next digit. You can press the **Cancel** key at any time to exit the utility without making any changes.

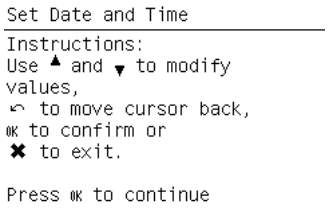

3. Follow the instructions to enter the new date and time, then press **OK**.

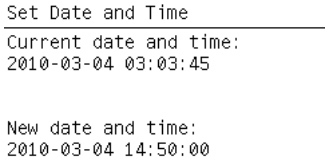

4. Press **OK** to confirm the new date and time. Press **Back** to modify the new date and time. Press **Cancel** to exit without changing the date and time.

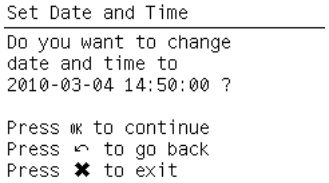

If the clock cannot be set, there could be a firmware error. Make sure you have the latest version of the firmware.

5. Once the new time has been confirmed, the Front Panel will prompt you to restart the printer.

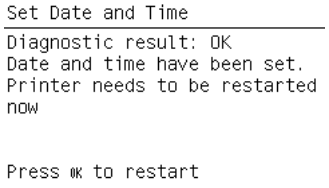

6. Press **OK** to restart the printer.

Enable/Disable Firewall

The purpose of this Service Utility is to enable or disable the system firewall. There are currently no known cases when this will be needed, but it may help some users experiencing unexplained connectivity failures on embedded LANs.

Perform the Enable/Disable Firewall utility as follows:

1. In the Service Utilities submenu, scroll to **Enable/Disable Firewall** and press **OK**.

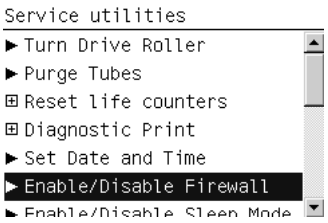

2. The Front Panel tells you whether the firewall is currently enabled or disabled, and allows you to change its status by pressing the **Up** and **Down** keys and then the **OK** key.

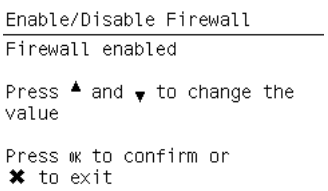

3. The system upgrades the internal memory to reflect the chosen selection.
4. Press **OK** to finish.

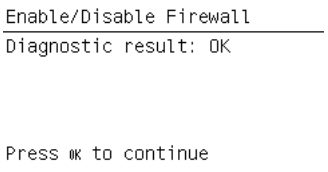

Enable/Disable Sleep Mode

1. In the Service Utilities submenu, scroll to **Enable/Disable Sleep Mode** and press **OK**.

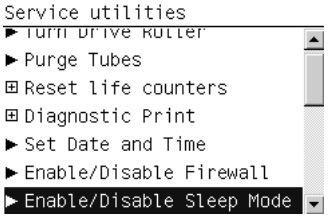

2. The Front Panel tells you whether sleep mode is currently enabled or disabled. Press **OK** to continue or **Cancel** to leave the sleep mode status unchanged.

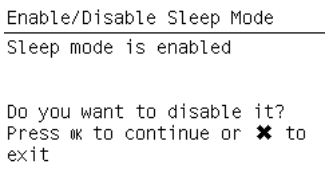

3. The Front Panel displays the sleep mode status. Press **OK** to return to the menu.

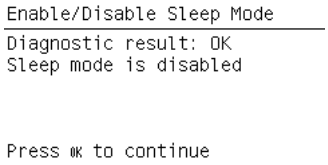

Disk Wipe DoD 5220.220M

The purpose of this Service Utility is to erase data from the Hard Disk securely, according to the directive DoD 5220.220M.

The printer's hard disk is used as a temporary storage area for print jobs. The Secure Disk Wipe utility can erase your information from the hard disk to prevent unauthorized access.

Secure Disk Wipe provides three different levels of security:

- **Unsecure Mode:** All pointers to the information are erased. The information itself is **not** erased, and remains on the hard disk until the disk space it occupies is needed for new print jobs. The new print information overwrites the old information. While the information remains on the disk, it is difficult for most people to access, but may be accessed using software designed for that purpose. This is the normal method in which files are erased on most computer systems; it is the fastest method but the least secure. This is the default security level when using Secure Disk Erase.
- **1 Pass Mode:** All pointers to the information are erased, and the information itself is impapertely overwritten with a fixed character pattern. This method is slower than Non-Secure Fast Erase, but more secure. It may still be possible to access fragments of the erased information by using special tools to detect residual magnetic traces.
- **5 Pass Mode:** All pointers to the information are erased, and the information itself is repetitively overwritten using an algorithm designed to eliminate any residual traces. This is the slowest method, but the most secure. Secure Sanitizing Erase meets the US Department of Defense 5220-220M requirements for clearing and sanitization of disk paper.

Execute the Disk Wipe DoD 5220.220M utility as follows:

1. In the Service Utilities submenu, scroll to **Disk Wipe DoD 5220.220M** and press **OK**.

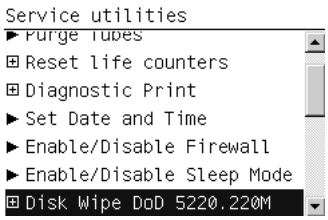

2. In the Disk Wipe DoD 5220.220M submenu, scroll to **Sanity Level** and press **OK**.

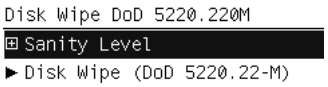

3. In the Sanity Level submenu, scroll to the required Sanity Level and press **OK**.

NOTE: Erasing the Hard Disk drive using either of the Secure Sanitize Levels is a very slow process, 6 hours for the 1 Pass mode and 40 hours for the 5 Pass mode.

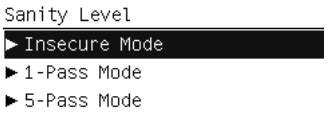

4. When the Sanity Level has been changed, the Front Panel displays the following message, or an error message if there is some problem.

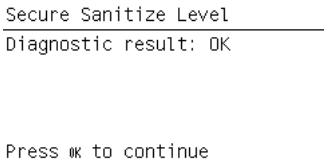

5. In the Disk Wipe DoD 5220.220M submenu, scroll to **Disk Wipe (DoD 5220.220M)** and press **OK**.

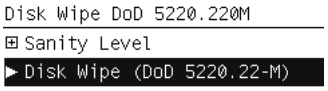

6. When the following message appears on the Front Panel, you must select whether you would like to perform a complete erase of the Hard Disk Drive using the previously selected erase mode by pressing **OK**. Press **Cancel** to exit the utility

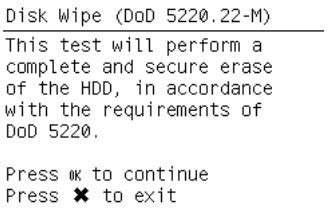

7. When the following message appears on the Front Panel, you must select whether you want to continue and completely erase the Hard Disk Drive by pressing **OK**. Press **Cancel** to exit the utility.

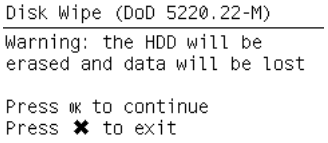

8. The erase process starts and the Front Panel shows a setup progress bar.
9. The printer reboots into the Disk Wipe mode, and continues with the disk erase until it is completed.

△ **CAUTION:** Do not try to interrupt this process. All Front Panel keys are disabled while the printer erases the Hard Disk Drive.

Hard Disk Recovery Utility

The Hard Disk Recovery utility erases the hard disk and restores the factory firmware.

1. In the Service Utilities submenu, select **Hard Disk Recovery** and press **OK.**

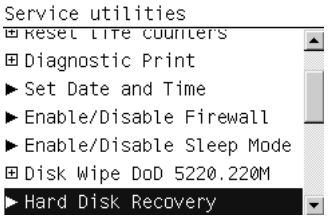

2. The front panel reminds you to unload the paper.

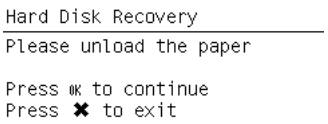

3. Press **OK** to proceed or **Cancel** to exit.

   If you press **OK**, the printer begins to erase the hard disk and restore the factory firmware; it restarts automatically during this process. The front panel displays a progress bar.

△ **CAUTION:** Do not try to interrupt this process. All front-panel keys are disabled until it has finished.

File System Check

The File System Check checks the file system on the hard disk and automatically corrects any problems that it finds.

1. In the Diagnostics menu, select **File System Check** and press **OK.**

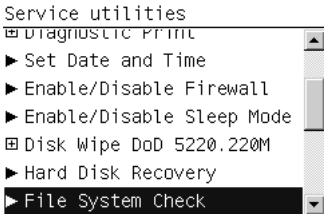

2. The front panel asks you if you want to proceed with the File System Check.

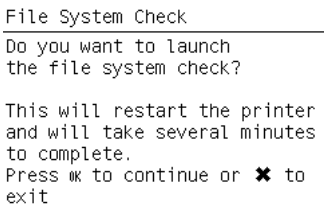

3. Press **OK** to proceed or **Back/Cancel** to exit.

If you press **OK**, the printer restarts and the File System Check is performed.

SNMP Language Write Access

The purpose of this utility is to prevent SNMP tools from changing the printer language remotely. This is provided as a possible workaround to an exotic problem that has been seen with some SNMP tools that set the printer language in order to control the localization applied to some SNMP OIDs, but do not restore the printer language afterwards.

1. In the Service Utilities submenu, scroll to **SNMP Language Write Access** and press **OK.**

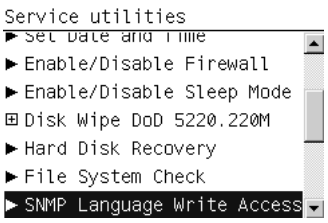

2. The utility checks whether the printer language can currently be changed using SNMP, and shows one of the following messages:

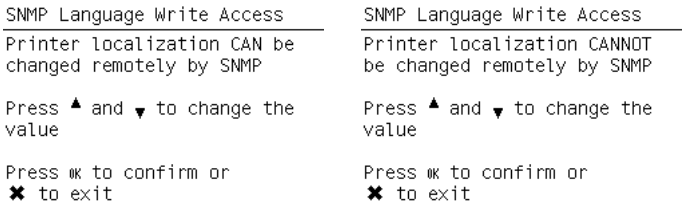

3. Use the **Up** and **Down** keys to choose the desired behavior and press **OK** to confirm your selection. The system updates the internal memory to reflect the chosen selection.

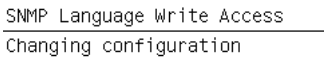

4. The Front Panel shows the “test complete” display until you press **OK**.

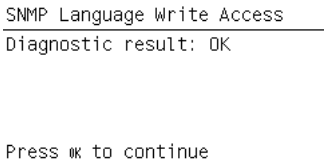

I/O Tests

The I/O Tests service test checks the network interface hardware of the Formatter. To run this test successfully, the printer’s embedded LAN connector must be connected to an Ethernet network.

Perform this test after replacing the Formatter.

1. In the Service Utilities submenu, scroll to **I/O Tests** and press **OK.**

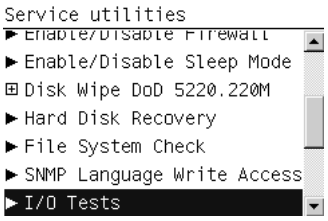

2. The front panel asks you if you want to proceed with the I/O tests.

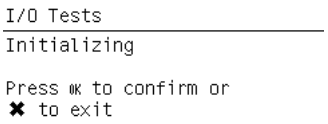

Press **OK** to proceed or **Cancel** to exit.

3. The front panel displays the I/O information.

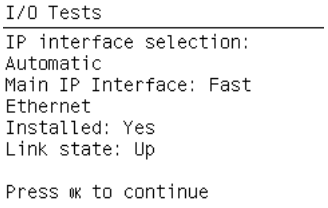

4. Press **OK** to start the test. The printer tests the I/O interfaces and displays the result as passed or failed after a few seconds.

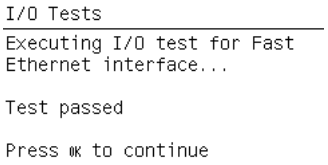

NOTE: If the test fails when the printer is connected to a network, there may be a hardware problem with the network chip on the formatter board.

Show/Hide Front Panel Information

The purpose of this utility is to hide the IP address and connection information that is normally visible on the Front Panel, in order to restrict access to the printer.

1. In the Service Utilities submenu, scroll to **Show/Hide Front Panel Info** and press **OK.**

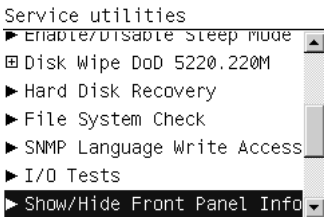

2. The Front Panel tells you whether the information is currently shown or hidden, and allows you to change the situation by using the **Up** and **Down** keys and pressing **OK**.

```
Show/Hide Front Panel Info
SHOW network information
in front panel

Press ▲ and ▼ to change the
value

Press OK to confirm or
✖ to exit
```

3. The system upgrades the internal memory to reflect the chosen selection.
4. Press **OK** to finish.

```
Show/Hide Front Panel Info
Diagnostic result: OK



Press OK to continue
```

Enable/Disable Port 280

This security utility allows you to enable or disable port 280 communication with the Embedded Web Server using the embedded LAN connection.

1. In the Service Utilities submenu, scroll to **Enable/Disable Port280** and press **OK.**

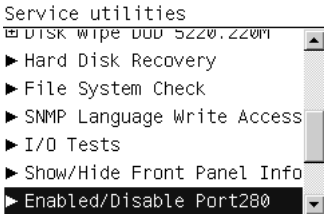

2. The Front Panel tells you whether the port is currently enabled or disabled, and allows you to change the situation by using the **Up** and **Down** keys and pressing **OK**.

```
Enabled/Disable Port280
Access to Embedded Web Server
on Port280 = ENABLED

Press ▲ and ▼ to change the
value

Press OK to confirm or
✖ to exit
```

3. Press **OK** to finish.

```
Enabled/Disable Port280
Diagnostic result: OK



Press OK to continue
```

Rewinder Adjust

The Rewinder Adjust utility clears the calibration parameters associated with a Rewinder motor when it has to be replaced.

The changes made by this utility take effect only after the printer has been restarted. Therefore, you are recommended to proceed in the following order.

1. Use the Rewinder Adjust utility to reset the calibration parameters.

   a. In the Service Utilities submenu, scroll to **Rewinder Adjust** and press **OK**.

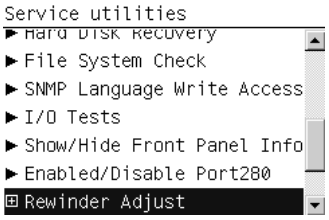

   b. Select the Rewinder for roll 1 or roll 2 and press **OK**.

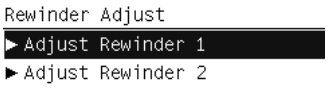

   c. Confirm your selection by pressing **OK**.

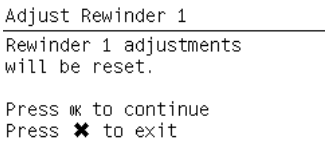

   d. The printer resets the calibration parameters and checks that the default values have been correctly saved inside the NVM memory. If the check fails, a 79:04 error is generated, and the procedure is interrupted. Otherwise, the printer confirms success as follows.

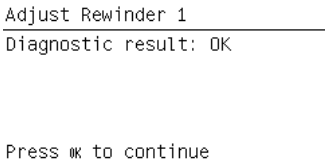

2. Turn off the printer.
3. Replace the Rewinder motor.

Disable Upper Roll Cover (T1200 series only)

With the upper roll cover enabled, the arm pinches may leave marks on some types of glossy instant-dry paper; these marks may be particularly visible in prints with black area fills. This utility disables the upper roll cover in order to allow the printer to print with the upper roll cover opened. The roll cover will be re-enabled automatically when the printer is restarted.

Before starting, you should load instant-dry paper as Roll 1.

1. In the Service Utilities submenu, scroll to **Disable upper roll cover** and press **OK**.

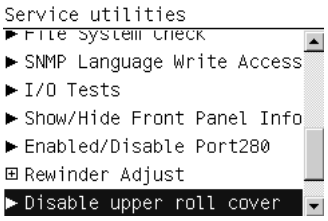

   If roll 1 is not active, it is automatically advanced to the platen and activated.

2. Wait until you see the following message.

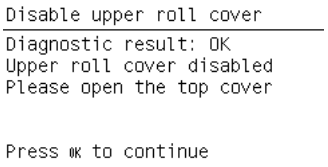

   Open the upper roll cover and press **OK**.

Disabling the upper roll cover has some implications for the operation of the printer.

- If the printer switches to printing on Roll 2 for any reason, Roll 1 can be unloaded. This can be avoided by not loading any Roll 2.
- If the roll cover is closed without restarting the system or by selecting the Enable Upper Roll Cover utility, you may see print quality issues and false reports of paper jams.
- A new roll cannot be loaded as Roll 1.

Enable Upper Roll Cover (T1200 series only)

This utility re-enables the upper roll cover without restarting the printer.

1. In the Service Utilities submenu, scroll to **Enable upper roll cover** and press **OK**.

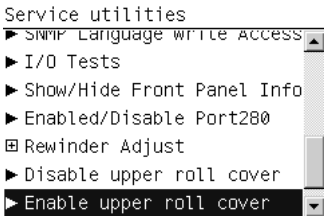

2. Close the roll cover when requested by the front panel.
3. Wait until you see the following message.

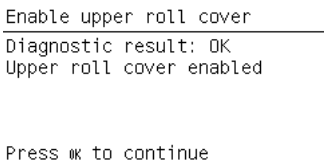

   Press **OK**.

Special Cutter Mode

The purpose of this utility is to improve the cut quality for some papers that present some cut-quality problems (straightness problems) using the normal mode. When this mode is enabled, this utility changes the cutting mode for all generic natural tracing papers. This mode reduces the problems, but cuts more slowly.

1. In the Service Utilities submenu, scroll to **Special cutter mode** and press **OK**.

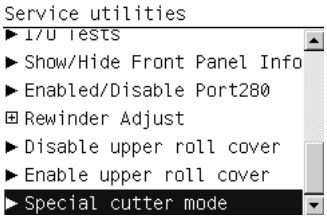

2. Press **OK** to enable special cutter mode or **Cancel** to disable it.

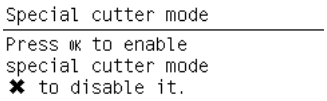

NOTE: Once enabled, this mode will remain in operation, even after the printer is restarted, until you disable it using the same utility.

NOTE: Remember that only tracing papers are affected by this utility.

Service Calibrations

The printer has several calibration procedures that must be performed under certain conditions.

NOTE: REMEMBER THAT CERTAIN CALIBRATIONS ARE REQUIRED EVEN IF AN ASSEMBLY HAS BEEN DISASSEMBLED TO GAIN ACCESS TO ANOTHER ASSEMBLY OR COMPONENT.

The following is a list of all internal service calibrations available in the printer. For instructions to enter the service calibrations menu, see Entering the Service Calibrations Menu on page 147.

+ Paper Advance Calibration on page 148

Print calibration pattern

Scan calibration pattern

+ Drop Detector Calibration on page 152

Calibrate drop detector

Reset calibration flag

Line Sensor Calibration on page 155

Calibrate Sheet Sensor on page 158

NOTE: If **all** the Calibrations need to be performed (for example, when both the Formatter and the Main PCA have been replaced), you must perform them in the above order.

Entering the Service Calibrations Menu

1. Press the **Menu** key on the front panel.

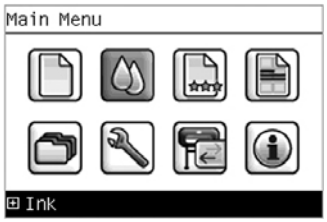

2. To have the user perform certain Service Utilities, once inside the Main Menu, press the **Down** arrow key and the **Cancel** key together. You are now in the Service Tools Menu.

   For on-site engineers, once inside the Main Menu, press the **Up** arrow key and the **Cancel** key together. You are now in the Service Menu.

3. From the Service menu, select **Service calibrations** and press the **OK** key.

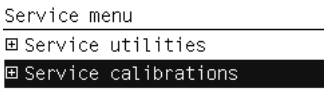

4. From the Service Calibrations menu, you can select any of the available calibrations, and press the **OK** key to begin the highlighted operation.

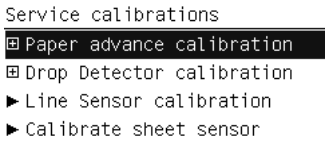

NOTE: If the printer is not used for 135 seconds, the printer exits the Service Calibrations Menu and you must repeat the above steps to re-enter it.

NOTE: In some cases a quick press of a button may not be recognized by the printer. When pressing a button, be sure to press it deliberately and all the way to the bottom of its travel.

Paper Advance Calibration

The purpose of this Service Calibration is to calibrate the nominal advance of the paper. This calibration is necessary to control the exact movement of the paper in order to avoid print quality problems like banding.

If you need to perform a Paper Advance Calibration to solve a print quality problem, it is recommended that you first try the Paper Advance Calibration from the user's menu, which will calibrate the printer to a specific paper type.

NOTE: You can perform Paper Advance Calibration on a sheet or roll, but the paper type should always be HP Universal Instant-dry Photo Gloss. You are recommended to order the Paper Advance Calibration Kit (24-in models: Q6683-60241, 44-in models: Q6687-60093), which contains two sheets of HP Universal Instant-dry Photo Gloss paper.

Perform the Service Accuracy Calibration whenever:

- Banding is detected in prints.

Service calibrations also need to be performed after removing or replacing certain printer components. If you have removed or replaced printer components, check the Service Calibration Guide to Removal and Installation on page 184 to see which tests and calibrations you need to perform.

The Paper Advance Calibration is split into two parts and should always be done in this order:

1. Print Calibration Pattern - The printer first calibrates the Analog Encoder and then prints the Paper Advance Calibration pattern.
2. Scan Calibration Pattern - The printer scans the Paper Advance Calibration pattern in order to calibrate the nominal advance of the paper.

NOTE: Only scan the Calibration Pattern in the printer that was used to actually print it. Using the Calibration in a different printer could cause it to experience paper advance problems. After scanning the Calibration Pattern, it should be discarded.

TIP: If you are using roll paper and the printer is a T1200 series, you are recommended to calibrate using the upper roll, which will give better results.

Perform the Paper Advance Calibration as follows.

1. Unload paper from the printer.

2. In the Service Calibrations submenu, scroll to **Paper advance calibration** and press **OK.**

```
Service calibrations
⊞ Paper advance calibration
⊞ Drop Detector calibration
▶ Line Sensor calibration
▶ Calibrate sheet sensor
```

3. In the Paper Advance Calibration submenu, scroll to **Print Calibration Pattern** and press **OK.**

```
Paper advance calibration
▶ Print calibration pattern
▶ Scan calibration pattern
```

4. When the following message appears on the front panel, you must select whether you would like to continue with the calibration by pressing the **OK** key. Press **Cancel** to exit the calibration.

```
Print Calibration Pattern
Press OK to continue

Press ✖ to exit
```

5. If paper is detected, the printer will prompt you to remove it. If paper is **not** detected, the calibration will continue.

6. The printer will start to calibrate the Analog Encoder and the following message will be displayed on the Front Panel.

```
Print Calibration Pattern
Calibrating analog encoder
```

If the Calibration is not done or if the values are out of the limits, a warning message will appear on the Front Panel. In this case, try the following:

- Check that the printer has the latest firmware version. If not, update the firmware to the latest version.
- Retry the Paper Advance Calibration.

7. Once the Analog Encoder has been calibrated correctly, the Front Panel prompts you to select the type of paper you will use. Use the **Arrow** keys to choose roll or sheet paper. Press the **OK** key to start loading the paper.

```
Print Calibration Pattern
Select paper source: Sheet
Press ▲ and ▼ to change the
value
Press OK to confirm selection
```

8. The Front Panel prompts you to load the paper. Make sure you load the paper that corresponds to your paper type selection.

```
Feed paper from roll
```

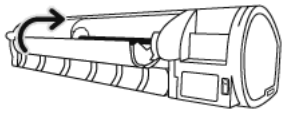

9. The Front Panel prompts you to select the paper category you will use for the calibration. Use the **Arrow** keys to scroll to your paper category and press the **OK** key to continue the paper load process.

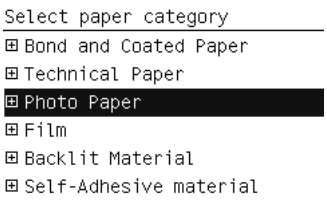

10. The Front Panel prompts you to select the specific type of paper you will use for the calibration. Use the **Arrow** keys to scroll through the menu and the **OK** key to select your paper type.

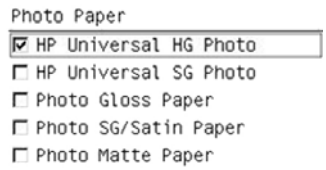

11. Once the paper is loaded into the printer, the following message will appear on the Front Panel.

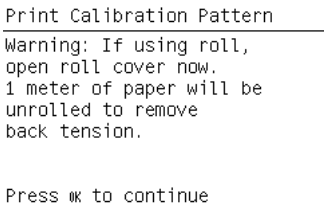

If roll paper has been loaded instead of a cut sheet, it's important that you open the cover of the loaded roll. After you press **OK**, the printer will automatically unroll 1 meter of paper and roll it back again to remove the back tension, and then start printing the pattern. Please note that opening the roll cover is crucial for avoiding potential paper jams during this operation. Press the OK key to continue.

12. Press **OK** to continue.

13. The printer advances and reels in about a meter of paper. The Front Panel displays the following messages:

    - Advancing Paper
    - Printing Pattern

14. The printer will start to print the Paper Advance Calibration Pattern. This could take several minutes during which the following message will be displayed on the Front Panel.

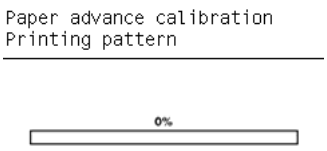

15. When the Calibration Pattern has been printed successfully, the Front Panel reminds you to leave it to dry for a while.

```
Paper advance calibration
Ink drying
1min 15s
```

16. When the Calibration Pattern is dry, the Front Panel will prompt you to continue. Press **OK**.

```
Print Calibration Pattern
Diagnostic result: OK


Press OK to continue
```

17. If you are printing on a roll, the printer cuts the paper and unloads the roll.

18. Return to the Paper Advance Calibration submenu, scroll to **Scan Calibration Pattern** and press **OK**

```
Paper advance calibration
▶ Print calibration pattern
▶ Scan calibration pattern
```

19. When the following message appears on the front panel, you must select whether you would like to continue with the calibration by pressing the **OK** key. Press **Back** or **Cancel** to exit the calibration.

```
Scan Calibration Pattern
Press OK to continue
Press ✖ to exit
```

20. A message will appear advising you that you will need to load the Calibration Pattern into the printer. Make sure that you rotate the printed pattern 90° clockwise and reload it printed-side down, so that the black arrows go into the printer first. Press the **OK** key to continue.

```
Scan Calibration Pattern
Rotate the sheet 90 degrees
clockwise
Press OK to continue
```

NOTE: Only scan the Calibration Pattern in the printer that was used to actually print it. Using the Calibration in a different printer could cause it to experience paper advance problems.

After scanning the Calibration Pattern, it should be discarded. When loading the Calibration Pattern, use the Cutter blade on the Print Platen to align the edge of the sheet. If you follow this advice, you will prevent the cutter from cutting a section of the Calibration Pattern, which could cause the Calibration to FAIL.

21. Load the Calibration Pattern following the instructions on the Front Panel. Once the Calibration Pattern is loaded correctly, the following message will be displayed on the Front Panel. Press the **OK** key to continue.

```
Scan Calibration Pattern
Press OK to continue
Press ✖ to exit
```

22. The Front Panel prompts you to select the paper category you used for the calibration. Select the same paper that you used to perform the Paper Advance Calibration print. Use the **Arrow** keys to scroll to your paper category and press the **OK** key to continue the paper load process.

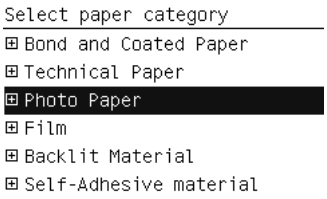

23. The Front Panel prompts you to select the specific type of paper you used for the calibration. Use the **Arrow** keys to scroll through the menu and the **OK** key to select your paper type.

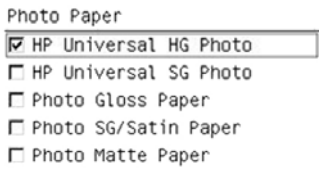

24. The printer will scan the Calibration Pattern which could take several minutes. Once the calibration is completed successfully, the following message will be displayed on the Front Panel. Press the **OK** key to continue.

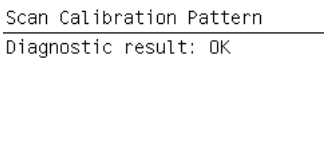

If the Paper Advance Calibration fails for any reason, a warning message will appear on the Front Panel. In this case, try the following:

- Check that the Calibration Pattern was not incorrectly cut (trimming the actual pattern) during the paper load process. If this is the case, perform the Paper Advance Calibration again from **step 1**.
- Perform a Line Sensor Calibration. See Line Sensor Calibration on page 155.
- Replace the Line Sensor. See Line Sensor on page 296.
- If the problem continues, replace the Media Advance Driver. See Media Advance Drive on page 302.

Drop Detector Calibration

The purpose of this Service Calibration is to calibrate the Drop Detector (located in the Service Station) in relation to the Carriage Assembly. There are two menu options to calibrate the Drop Detector:

- Calibrate Drop Detector
- Reset Calibration Flag

Always perform the Reset Calibration Flag calibration BEFORE calibrating the drop detector.

Service calibrations also need to be performed after removing or replacing certain printer components. If you have removed or replaced printer components, check the Service Calibration Guide to Removal and Installation on page 184 to see which tests and calibrations you need to perform.

Reset Calibration Flag

Run this option before replacing the drop detector (service station), so that the printer will not try to perform a drop detection until the new drop detector has been calibrated.

1. In the Service Calibrations submenu, select **Drop Detector calibration** and press **OK**.

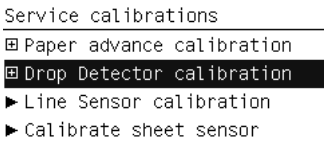

2. In the Drop Detector Calibration menu, scroll to **Reset Calibration Flag** and press **OK**.

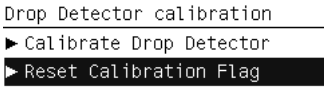

3. When the following message appears on the front panel, you must select whether you would like to continue with the calibration by pressing the **OK** key. Press **Cancel** to exit the calibration.

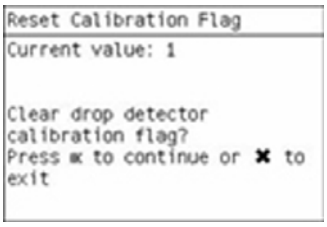

4. The printer resets the calibration flag. Press **OK** to return to the menu.

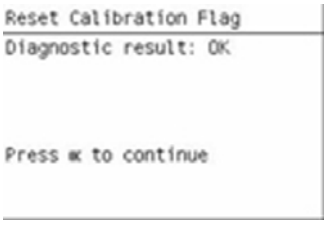

5. Shut down the printer and replace the drop detector.
6. Start the printer and calibrate the drop detector.

Calibrate Drop Detector

1. In the Service Calibrations submenu, scroll to **Drop Detector calibration** and press **OK**.

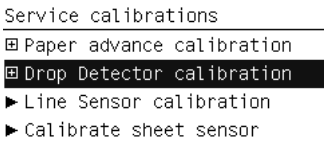

2. In the Drop Detector Calibration submenu, scroll to **Calibrate Drop Detector** and press **OK**.

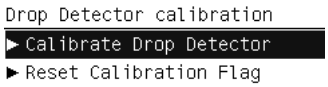

3. When the following message appears on the front panel, you must select whether you would like to continue with the calibration by pressing the **OK** key. Press **Cancel** to exit the calibration.

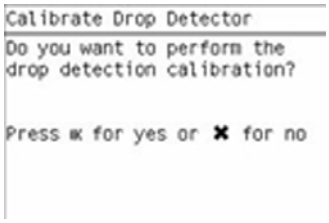

4. The printer will start to calibrate the Drop Detector, which takes about 30 seconds.

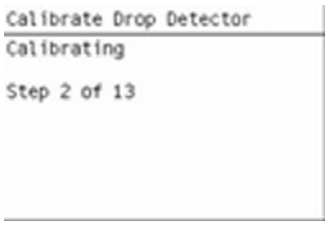

5. Once the Drop Detector has been calibrated, the results will be displayed on the Front Panel. Press **OK** to finish the calibration.

   The offset is the displacement from the nominal carriage position for doing the drop detection. Window width refers to values captured by the drop detector sensor. The offset should be within the valid range, and the window width should be at least the minimum shown. If the values are correct, press **OK** to accept them. If not, the drop detector is not correctly installed, either because the service station has not been correctly installed in the scan axis or because the drop detector is not correctly installed or not working properly. Press **Cancel** to reject the values.

△ **CAUTION:** Do not accept these values if they are not within the right range, as the printer will not work properly.

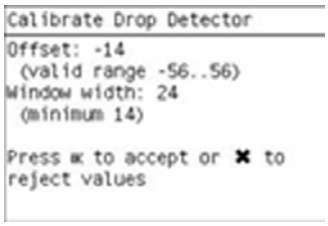

6. Press **OK** to end the calibration.

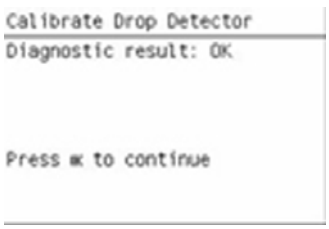

Line Sensor Calibration

The purpose of this Service Calibration is to calibrate the intensity of the line sensor in the Carriage PCA. An incorrect calibration can result in edge-detection failures during paper loading and incorrect reading of prints that are used for alignment or calibration.

Perform the Line Sensor Calibration in the following cases.

- If the edge detect procedure fails during paper loading.
- If the Carriage is disassembled or replaced.
- If the Line Sensor is disassembled or replaced.
- If banding is detected in prints.
- If misalignment between colors is detected.

Service calibrations also need to be performed after removing or replacing certain printer components. If you have removed or replaced printer components, check the Service Calibration Guide to Removal and Installation on page 184 to see which tests and calibrations you need to perform.

△ **CAUTION:** Keep your hands away from the Print Platen during calibration, as the Carriage moves at high speed and you could injure yourself or damage the Carriage Assembly.

The full calibration process

1. If possible, load a roll of glossy paper with a width of at least 24 inches into the printer before starting the calibration. The printer will later reject paper that is too narrow or not glossy.
2. In the Service Calibrations submenu, scroll to **Line Sensor calibration** and press **OK.**

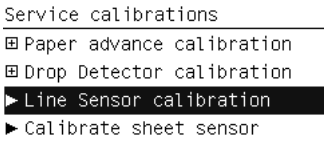

3. When the following message appears on the front panel, press the **OK** key to continue or the **Cancel** key to exit the calibration. If the printer detects no paper, see The manual paper loading process on page 157.

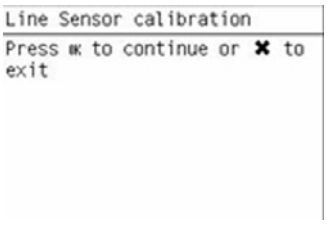

4. The printer calibrates the intensity of the LEDs and displays the results on the Front Panel. Press **OK** to continue or press **Cancel** to exit the calibration.

```
Line Sensor calibration
  (WHITE-BLACK)   RANGE
B:    799       700-900
R:    855       700-900
O:    861       700-900
G:    861       700-900

Press ⏎ to confirm or
✖ to exit
```

If the values are not within the range specified, an error appears on the Front Panel. In this case, repeat the calibration from the beginning. If necessary, replace the Line Sensor.

5. The next step is to calibrate the Line Sensor position. The printer prints a line of black dots and then scans them.

6. Once the Line Sensor position has been calibrated, the results are displayed on the Front Panel. Press **OK** to continue or **Cancel** to exit.

```
Line Sensor calibration
Y offset range: -63 to -22
Y offset got: -50
X offset range: -30 to 30
X offset got: 3

Press ⏎ to confirm or
✖ to exit
```

7. If the calibration fails or the values are out of range, try the following solutions.
   - Reseat the line sensor.
   - Repeat the calibration again from the beginning.
   - Replace the Line Sensor.
8. The printer now tries to align the printheads. When the following message appears on the front panel, press **OK** to continue or **Cancel** to exit.

```
Line Sensor calibration
Printhead Alignment
Calibration
Press ⏎ to continue or ✖ to
exit
```

9. If printhead alignment cannot be completed, try the following.

   - Enter the Front Panel menu and retry printhead alignment from there. If the alignment completes successfully, then perform color calibration.
   - If the alignment fails again, check the alignment pattern to see whether any of the printheads are printing incorrectly. If necessary, perform a printhead recovery through the Front Panel and retry printhead alignment.

10. If the printhead alignment ends successfully, you have completed the full Line Sensor calibration process.

The manual paper loading process

1. If the printer detects no paper, the following message is displayed. If you think you can load paper normally, press **Cancel** and resume the full calibration process (see The full calibration process on page 155). Otherwise, press **OK** to proceed with manual loading.

```
Line Sensor calibration
Paper needed for this
calibration. Press OK to
load paper manually.
Press Cancel to exit and
load paper normally.
Press OK to continue or ✖ to
exit
```

NOTE: The manual loading process performs only a partial calibration, after which you should try again to load roll paper and perform the full calibration.

2. The Front Panel prompts you to load the paper manually.

```
Line Sensor calibration
Please raise the lever
Please open the window
Please feed paper
to cover right side
of print platen
Please lower the lever
Please close the window
Press OK to continue
```

3. Feed a sheet of paper manually into the printer (the printer will not try to move it) until it fully covers the right-hand size of the print platen. It must cover the line sensor so that the printer detects it. An A4 or US Letter paper size is sufficient.

4. When you have loaded the paper, press **OK**. The printer starts the calibration process, and displays the results on the Front Panel if successful. Press **OK** to continue.

```
Line Sensor calibration
  (WHITE-BLACK)   RANGE
B:    799       700-900
R:    855       700-900
O:    861       700-900
G:    861       700-900

Press OK to confirm or
✖ to exit
```

If the calibration fails, start again from the beginning. If necessary, try replacing the Line Sensor.

5. The Front Panel asks you to unload the paper. It then reminds you to reload roll paper in the normal way and perform the full Line Sensor calibration (see The full calibration process on page 155).

Calibrate Sheet Sensor

The purpose of this Service Calibration is to calibrate the single-sheet sensor. This sensor should be calibrated whenever a new sensor is installed, or if single sheets cannot be loaded.

1. In the Service Calibrations submenu, scroll to **Calibrate sheet sensor** and press **OK.**

```
Service calibrations
⊞ Paper advance calibration
⊞ Drop Detector calibration
▶ Line Sensor calibration
▶ Calibrate sheet sensor
```

2. Remove paper from the sheet sensor and press **OK** to continue.

```
Calibrate sheet sensor
Please remove paper from
the sheet sensor.

Press OK to continue or ✖ to
exit
```

3. When you see the following message, insert sheet paper into the sheet sensor and press **OK** to continue.

```
Calibrate sheet sensor
Checking sensor

Please put paper in the
sheet sensor.


Press OK to continue
```

4. If the calibration was successful, a message appears such as the following. If you see an error message, check that the sheet sensor is connected, and retry the calibration.

```
Calibrate sheet sensor
Diagnostic result: OK



Press OK to continue
```

5 Parts and Diagrams

Printer Support on page 161

Center Covers (Front) on page 162

Roll Covers on page 163

Center Covers (Rear) on page 164

Right Cover on page 165

Left Cover on page 166

Right Hand Assemblies on page 167

Left Hand Assemblies on page 168

Carriage Assembly on page 169

Scan-Axis Assemblies on page 170

Paper Path Assemblies (Front) on page 171

Paper Path Assemblies (Rear) on page 172

Roll Supports on page 173

Tools 1 on page 174

Tools 2 on page 175

Miscellaneous Parts on page 176

Introduction

The tables of printer parts in this chapter include the notation (CSR A) or (CSR B) for parts that can be replaced by the customer. All other parts must be replaced by an engineer. See Customer Self Repair parts on page 182.

Printer Support

	HP Part Number	Part Description	Printer Model	Cross-reference
1	Q5669-60718	Leg Cover (CSR A)	All	
2	Q5669-60716	Leg Assembly	All	
3	Q6712-69001	Foot Assembly (includes 2 feet, gray color)	T1200 44 in	
3	CH639-69001	Foot Assembly (includes 2 feet, black color)	T770, T1200 24 in	
4	Q6659-60237	Bin Assembly (includes Bin Support, gray color) (CSR A)	T1200 44 in	Bin Assembly on page 188
4	CH639-69002	Bin Assembly (includes Bin Support, black color) (CSR A)	T770	Bin Assembly on page 188
5	Q6659-60236	Cross-brace Assembly	All 44-in models	
5	Q5669-60717	Cross-brace Assembly	All 24-in models	
6	Q5669-67063	Basket Tube × 2 (CSR A)	All	
7	Q5669-60715	Foot Bracket × 2	All	
8	Q5669-67063	Rear Basket Bracket × 2 (CSR A)	All	
–	Q5669-60730	Hardware Kit (Includes screws for Legs Assembly) (CSR A)	All	

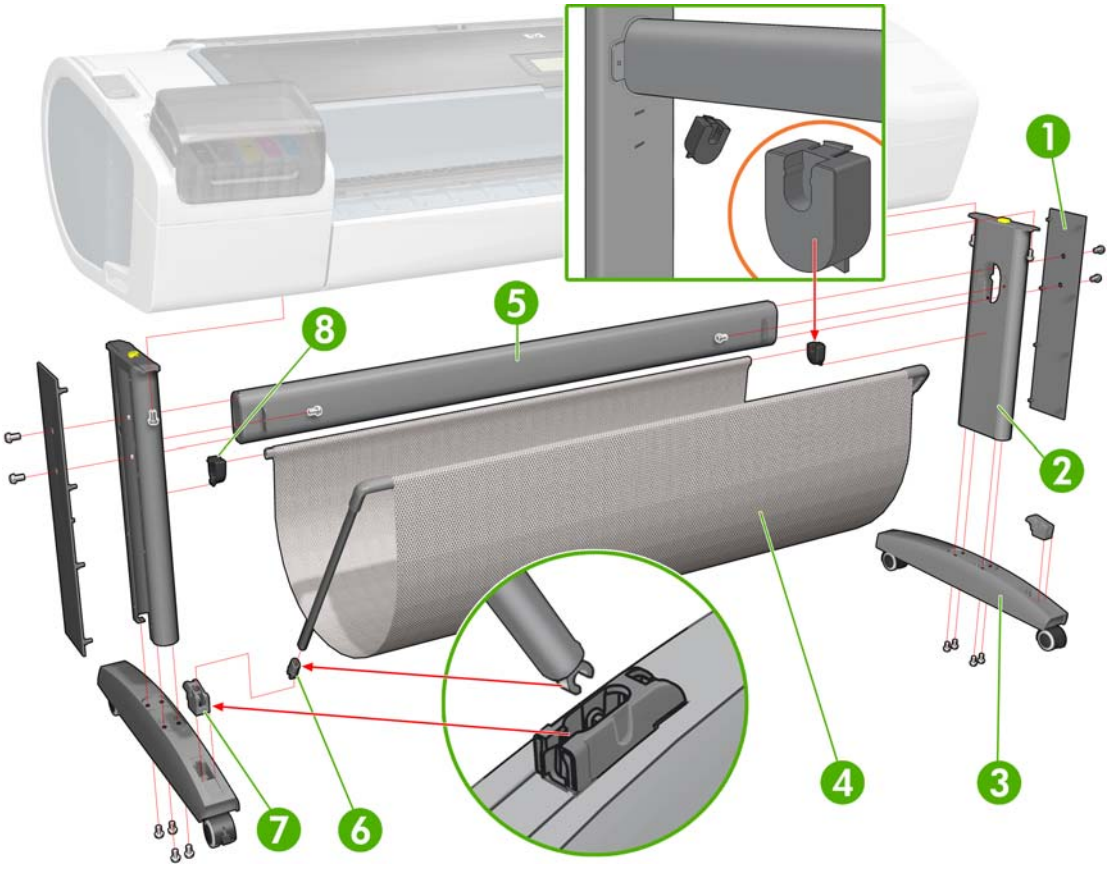

Center Covers (Front)

	HP Part Number	Part Description	Printer Model	Cross-reference
1	CH538-67030	Window	All 44-in models	Window on page 394
1	Q6711-60002	Window	All 24-in models	Window on page 394
2	CH538-67026	Top Cover	T1200 44 in	Cover, Top on page 244
2	CH539-67011	Top Cover	T770 44 in	Cover, Top on page 244
2	Q6711-60025	Top Cover	All 24-in models	Cover, Top on page 244
3	CH538-67071	Window Position Sensor with Shield	All	Window Position Sensor on page 398
4	Q6659-60089	Media Output Assembly	All 44-in models	Media Output Assembly on page 313
4	Q5669-60155	Anti-ESD Media Output Assembly	All 24-in models	Media Output Assembly on page 313
5	Q6687-60064	Front Cover	All 44-in models	Cover, Front on page 235
5	Q6683-60201	Front Cover	All 24-in models	Cover, Front on page 235
6	CH538-67032	Front Panel	T1200 44 in	Front Panel on page 270
6	CK837-67006	Front Panel	T770, T1200 24 in	Front Panel on page 270

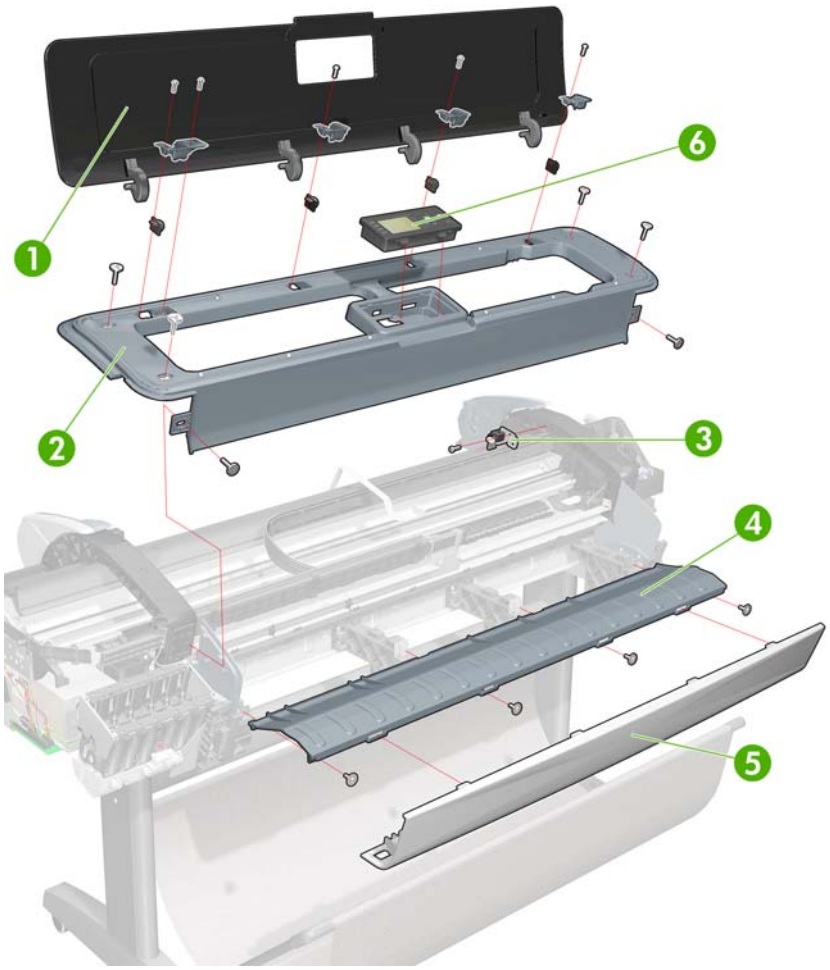

Roll Covers

	HP Part Number	Part Description	Printer Model	Cross-reference
1	CH538-67003	Upper Roll Cover Assembly with pinches	T1200 44 in	Roll Cover, Upper on page 350
1	CH539-67009	Upper Roll Cover Assembly Basic SV	T770 44 in	Roll Cover, Upper on page 350
1	CQ305-60018	Upper Roll Cover Assembly Basic SV	All 24-in models	Roll Cover, Upper on page 350
2	CH538-67002	Lower Roll Cover Assembly with pinches	T1200 44 in	Roll Cover, Lower (T1200 only) on page 346
3	CH538-67037	Pinch Arm Assembly for Roll Cover (CSR A)	T1200 44 in	Pinch Arm Assembly (T1200 only) on page 322
4	CH538-67050	Roll Cover Freewheel Assembly (CSR A)	All	Freewheel Assembly on page 267
5	CH538-67047	Roll Cover Bi-stable Springs Left and Right	T1200 44 in	Bi-stable Springs (T1200 only) on page 191

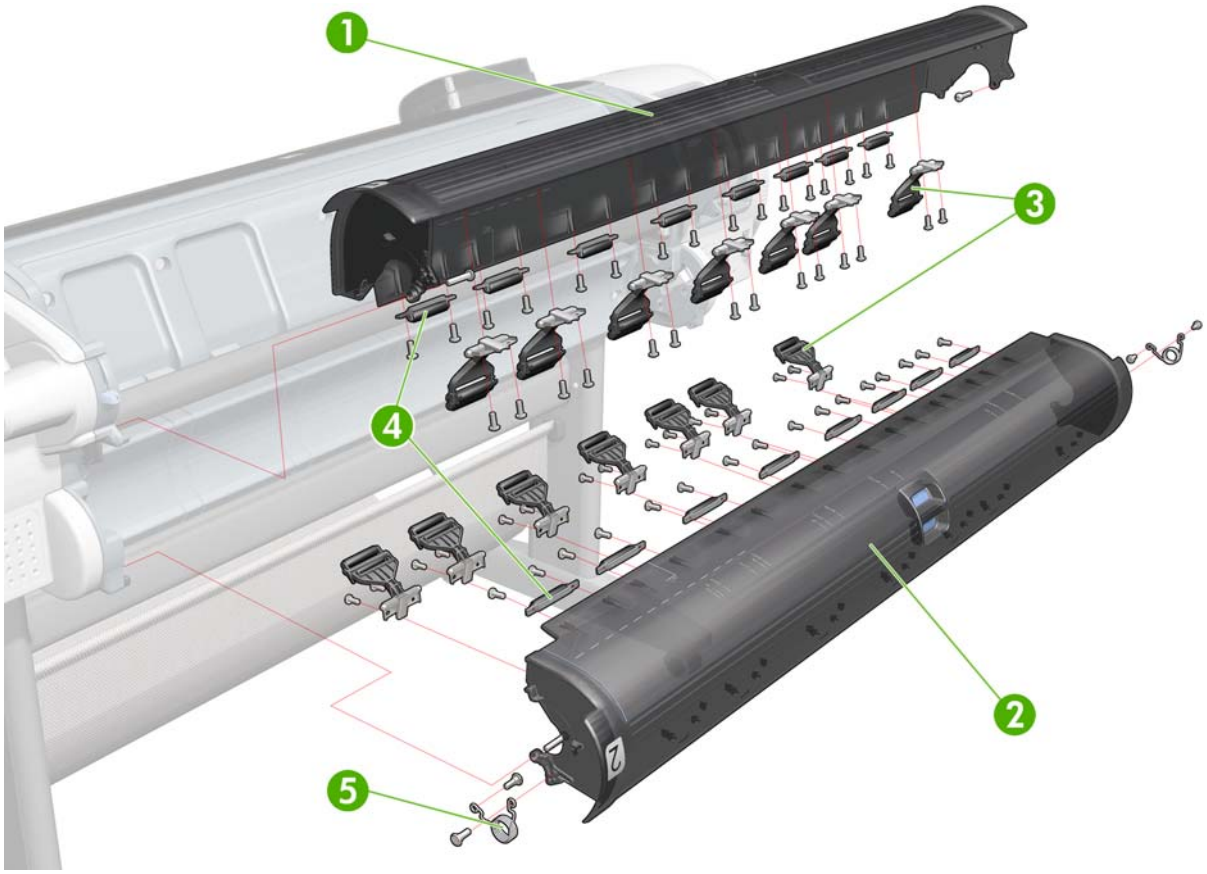

Center Covers (Rear)

	HP Part Number	Part Description	Printer Model	Cross-reference
1	CH538-67012	Rear Cover	All 44-in models	Cover, Rear on page 240
1	CQ305-60015	Rear Cover	All 24-in models	Cover, Rear on page 240
2	CH538-67022	Converger Assembly	T1200 44 in	Converger on page 233
2	CH539-67010	Converger CR Assembly	T770 44 in	Converger on page 233
2	CQ305-60019	Converger CR Assembly	All 24-in models	Converger on page 233
3	CH538-67039	Cleanout 44 new rev	All 44-in models	Cleanout on page 231
3	Q6683-67802	Cleanout 24 rev B	All 24-in models	Cleanout on page 231
4	Q5669-67801	Out-of-paper Sensor	All	Out-of-paper Sensor on page 315

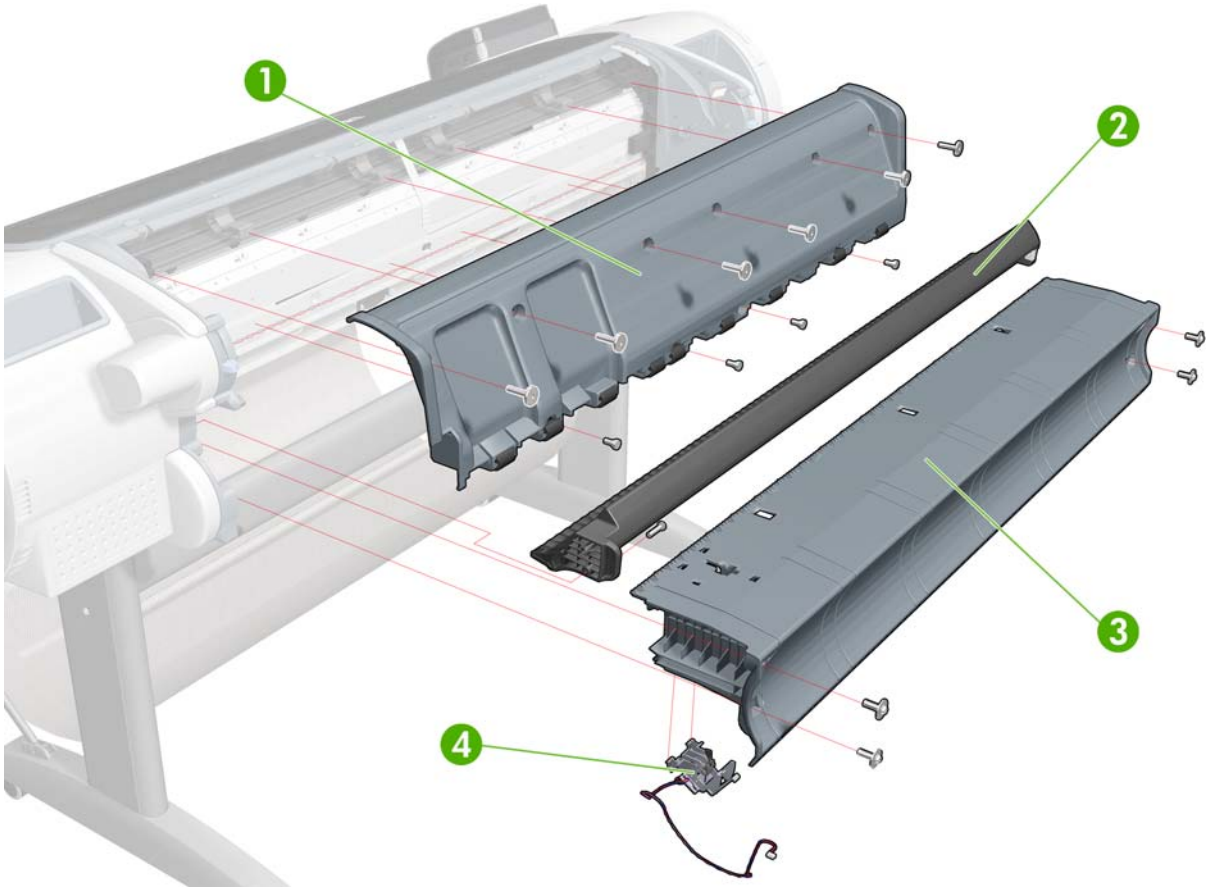

Right Cover

	HP Part Number	Part Description	Printer Model	Cross-reference
1	CH538-67014	Right Cover	T1200 44 in	Cover, Right on page 241
1	CH539-67006	Right Cover	T770, T1200 24 in	Cover, Right on page 241
2	Q6675-60109	Integrated Front Trim (Left and Right)	All	Front Trim, Right on page 275
3	CH538-67045	Right Ink Cartridge Door	All	Ink Cartridge Door, Right on page 281

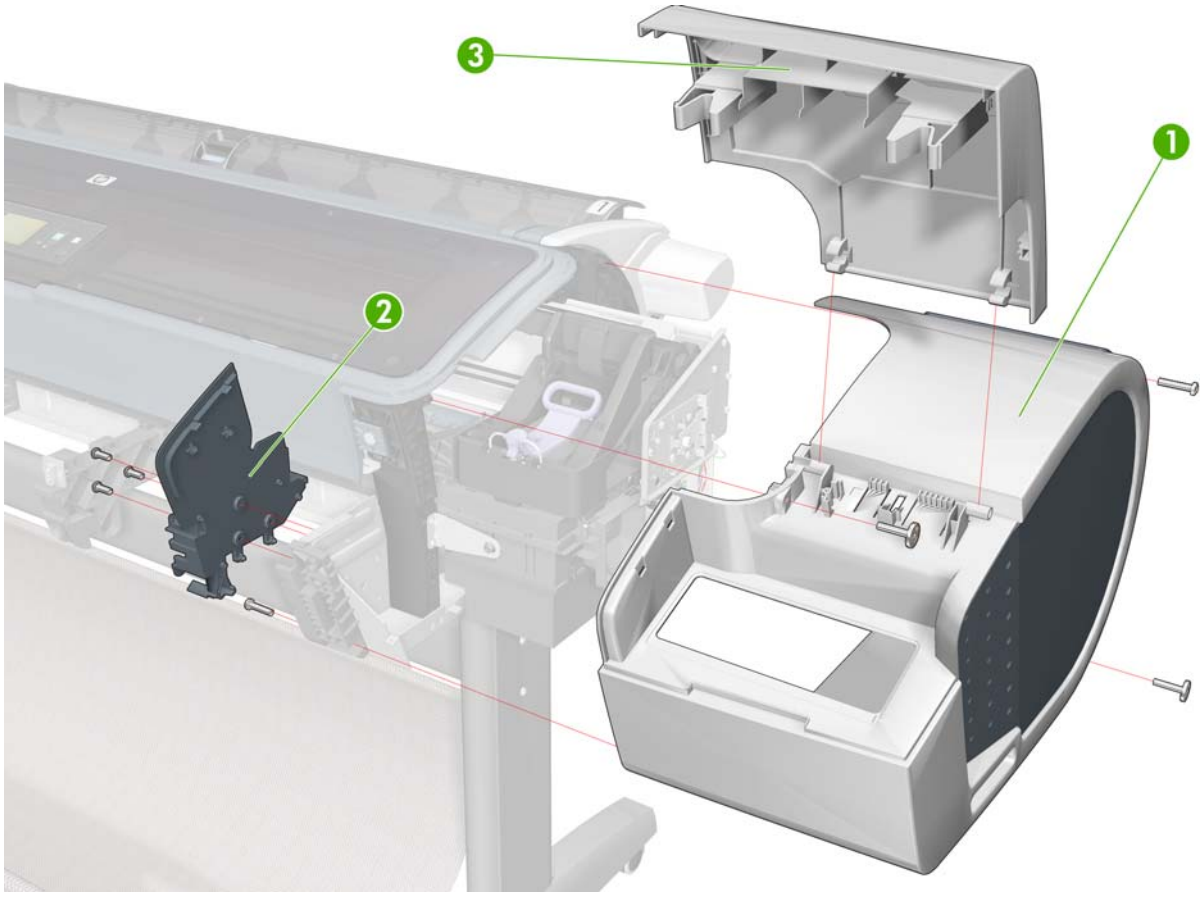

Left Cover

	HP Part Number	Part Description	Printer Model	Cross-reference
1	CH538-67017	Left Ink Cartridge Door	T1200 44 in	Ink Cartridge Door, Left on page 279
1	CH539-67008	Left Ink Cartridge Door	T770, T1200 24 in	Ink Cartridge Door, Left on page 279
2	Q6675-60109	Integrated Front Trim (Left and Right)	All	Front Trim, Left on page 273
3	CH538-67005	Left Side Panel (CSR B)	T1200 44 in	Panel, Left on page 318
3	CH539-67002	Left Side Panel (CSR B)	T770, T1200 24 in	Panel, Left on page 318
4	CH538-67013	Left Cover with Ink Door	T1200 44 in	Cover, Left on page 236
4	CH539-67005	Left Cover with Ink Door	T770, T1200 24 in	Cover, Left on page 236

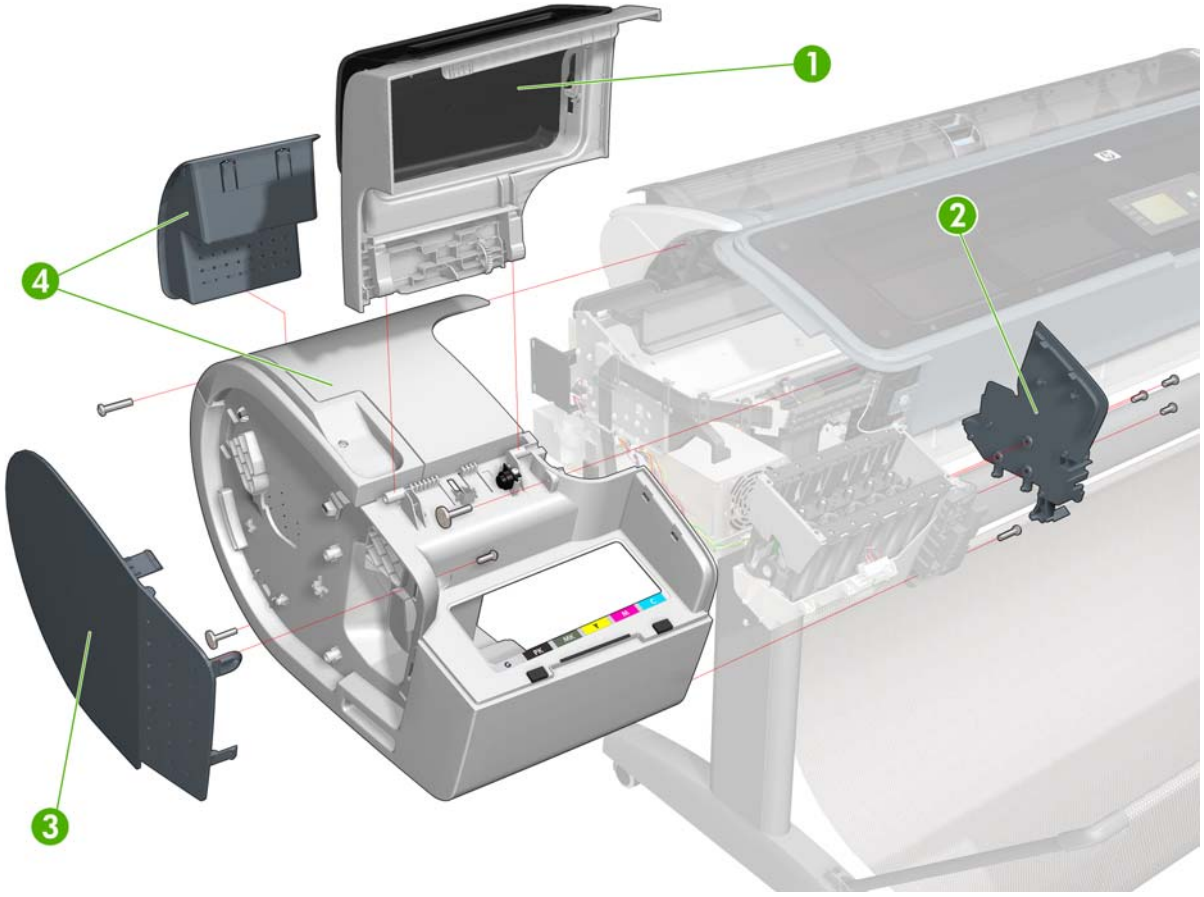

Right Hand Assemblies

	HP Part Number	Part Description	Printer Model	Cross-reference
1	Q6675-60043	Carriage Rail Oiler	All	Carriage Rail Oiler on page 224
2	Q5669-67807	Pen to Paper Space (PPS) Solenoid	All	Pen to Paper Space (PPS) Solenoid on page 320
3	CH538-60141	Scan-Axis Motor	All	Scan-axis Motor on page 363
4	Q5669-60667	Service Station Spittoon	All	Service Station on page 367
5	CH538-67040	Service Station (includes Drop Detector and Service Station Spittoon)	All	Service Station on page 367
6	Q5669-60666	Drop Detector	All	Drop Detector on page 251

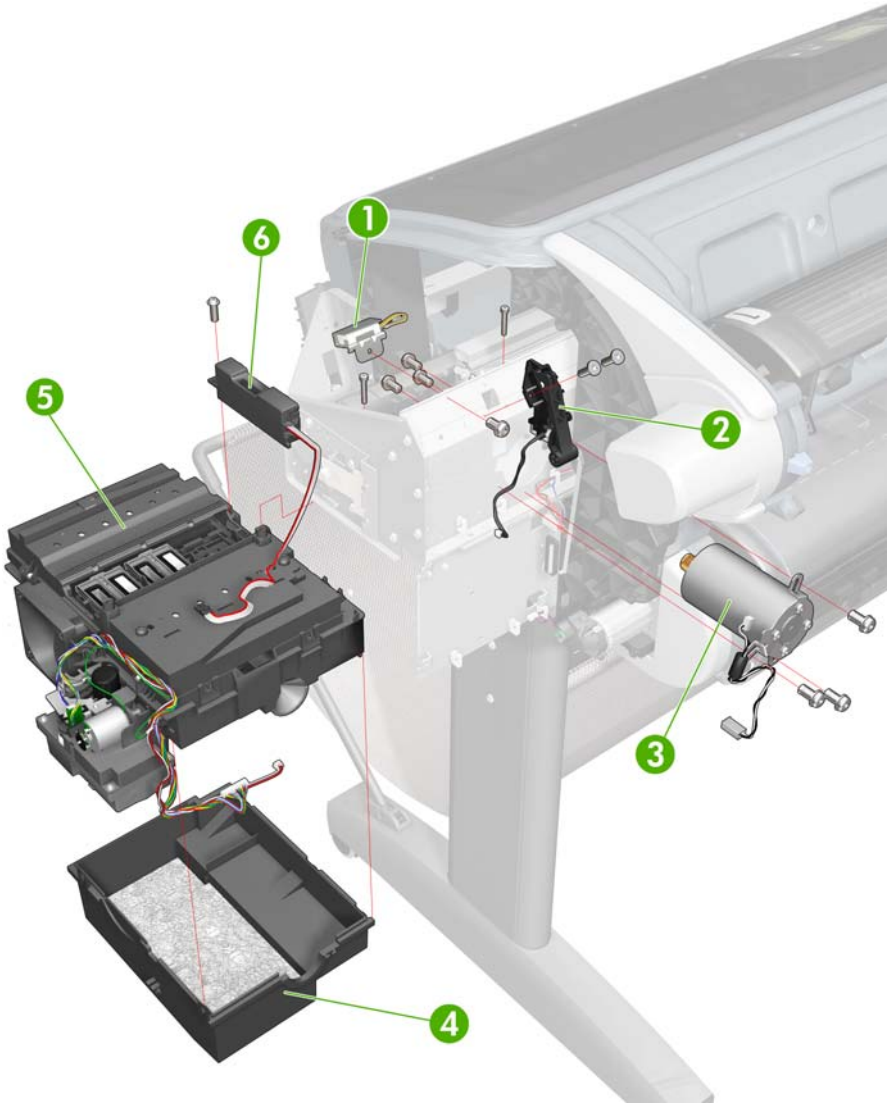

Left Hand Assemblies

	HP Part Number	Part Description	Printer Model	Cross-reference
1	Q6683-60188	Left Ink Supply Station	All	Ink Supply Station, Left on page 283
2	Q6718-67017	Starwheel Motor	All	Starwheel Motor on page 382
3	CK837-67020	Encoder Sensor	All	Encoder Disk and Encoder Sensor on page 260
4	Q5669-60702	Encoder Disk	All	Encoder Disk and Encoder Sensor on page 260
5	CH538-67027	Media Advance Transmission	All	Media Advance Drive on page 302
6	Q5669-67049	Left Spittoon	All	Spittoon, Left on page 374
7	CH538-67011	Power Supply Unit (PSU)	All	Electronics Module Main PCA and PSU on page 256
8	CH538-67009	Main PCA with PSU	All	Electronics Module Main PCA and PSU on page 256
9	CH538-67004	Formatter without Hard Disk	All	Formatter on page 266
10	CQ305-60023	SATA Hard Disk Drive with FW	All	Formatter on page 266
11	Q5669-60705	Media Lever	All	Media Lever on page 309
12	Q5669-60706	Media Lever Position Sensor	All	Media Lever Position Sensor on page 311

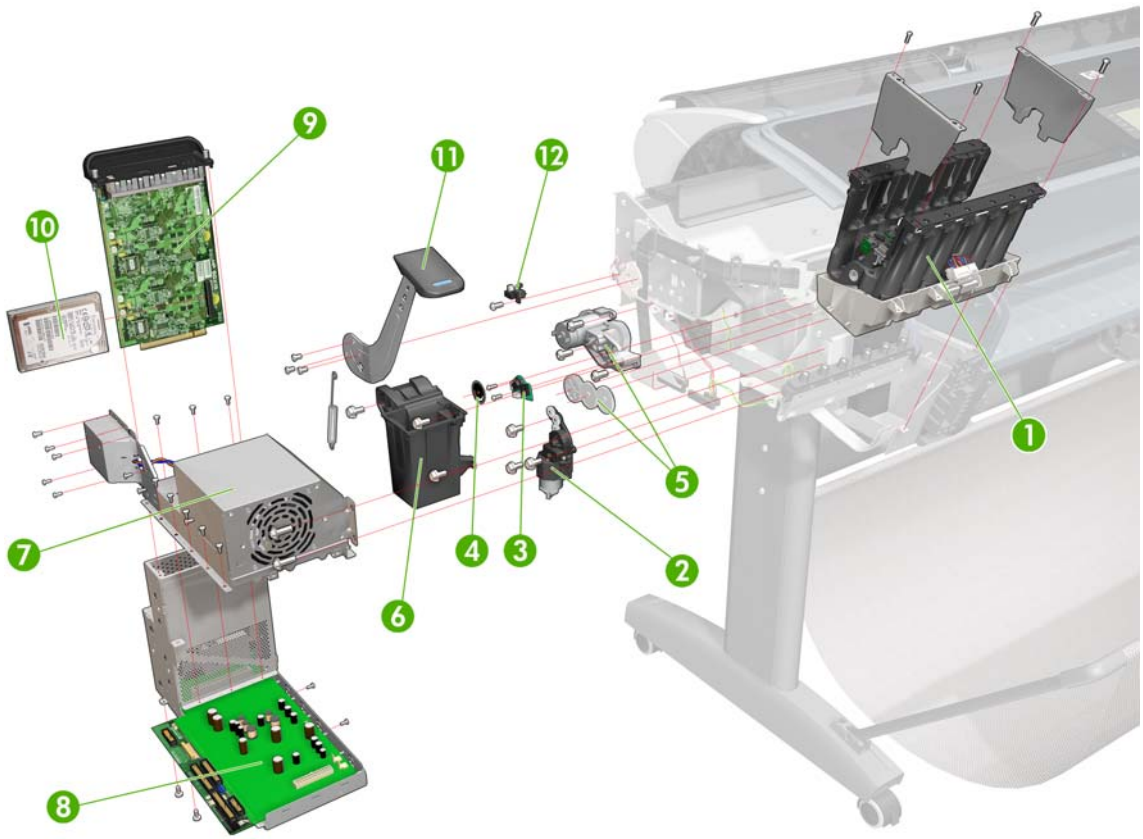

Carriage Assembly

	HP Part Number	Part Description	Printer Model	Cross-reference
1	CH538-67044	Carriage with Cutter Assembly	All	Carriage and Cutter Assembly on page 208
2	CH538-67019	Cutter Assembly with Screw CSR A)	All	Cutter Assembly on page 247
3	Q5669-60687	Carriage Rear Bushing	All	Carriage Bushing, Rear on page 217
4	CK837-67001	Carriage Latch	All	Carriage Cover and Carriage Latch on page 219
5	CK837-67002	Carriage Cover	All	Carriage Cover and Carriage Latch on page 219
6	CK837-67003	Carriage PCA Cover	All	Carriage PCA on page 226
7	CK837-67005	Carriage PCA	All	Carriage PCA on page 226
8	Q6683-67004	Line Sensor	All	Line Sensor on page 296

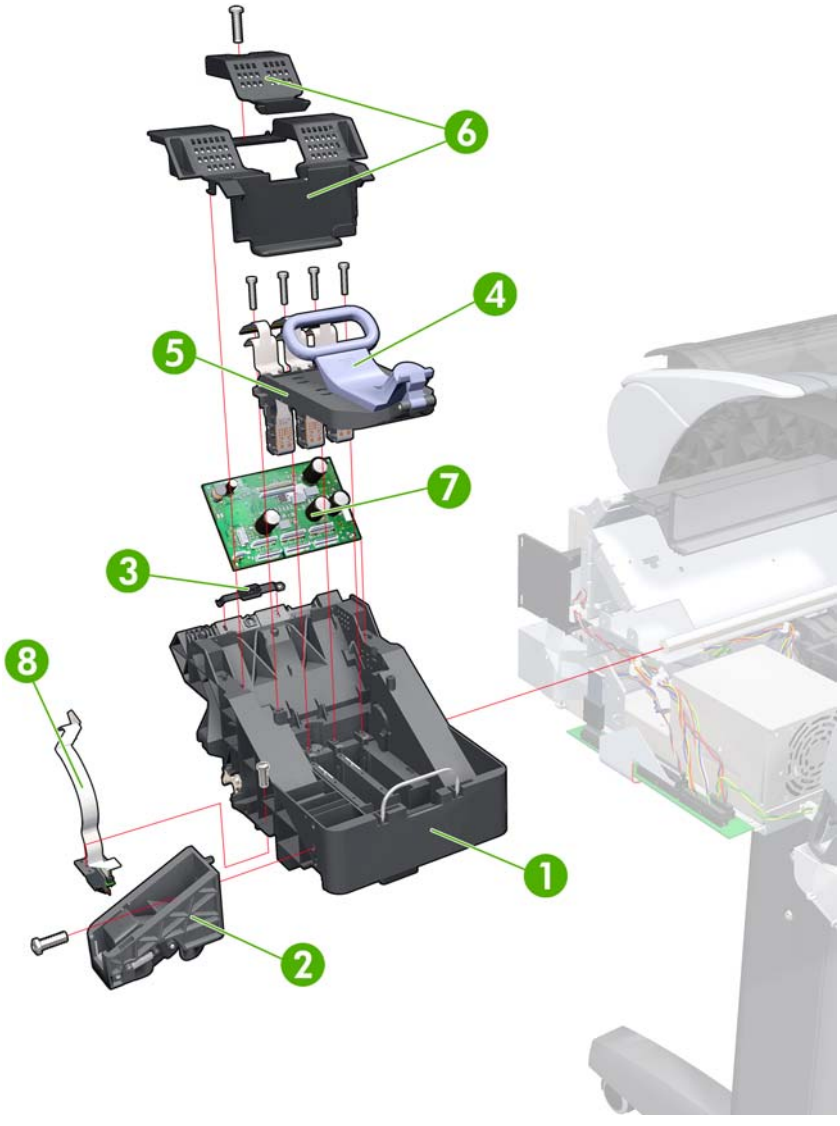

Scan-Axis Assemblies

	HP Part Number	Part Description	Printer Model	Cross-reference
1	CK839-67005	Encoder Strip (including Encoder Strip Spring and Nut)	All 44-in models	Encoder Strip, spring and attachment nut on page 263
1	CK837-67017	Encoder Strip (including Encoder Strip Spring and Nut)	All 24-in models	Encoder Strip, spring and attachment nut on page 263
2	CH538-67018	Belt Assembly with Belt Tensioner (3)	All 44-in models	Belt Assembly on page 187
2	CQ305-60016	Belt Assembly with Belt Tensioner (3)	All 24-in models	Belt Assembly on page 187
4	CH538-67025	Tube System with Trailing Cable	All 44-in models	Trailing Cable on page 384
4	CK837-67014	Tube System with Trailing Cable	All 24-in models	Trailing Cable on page 384

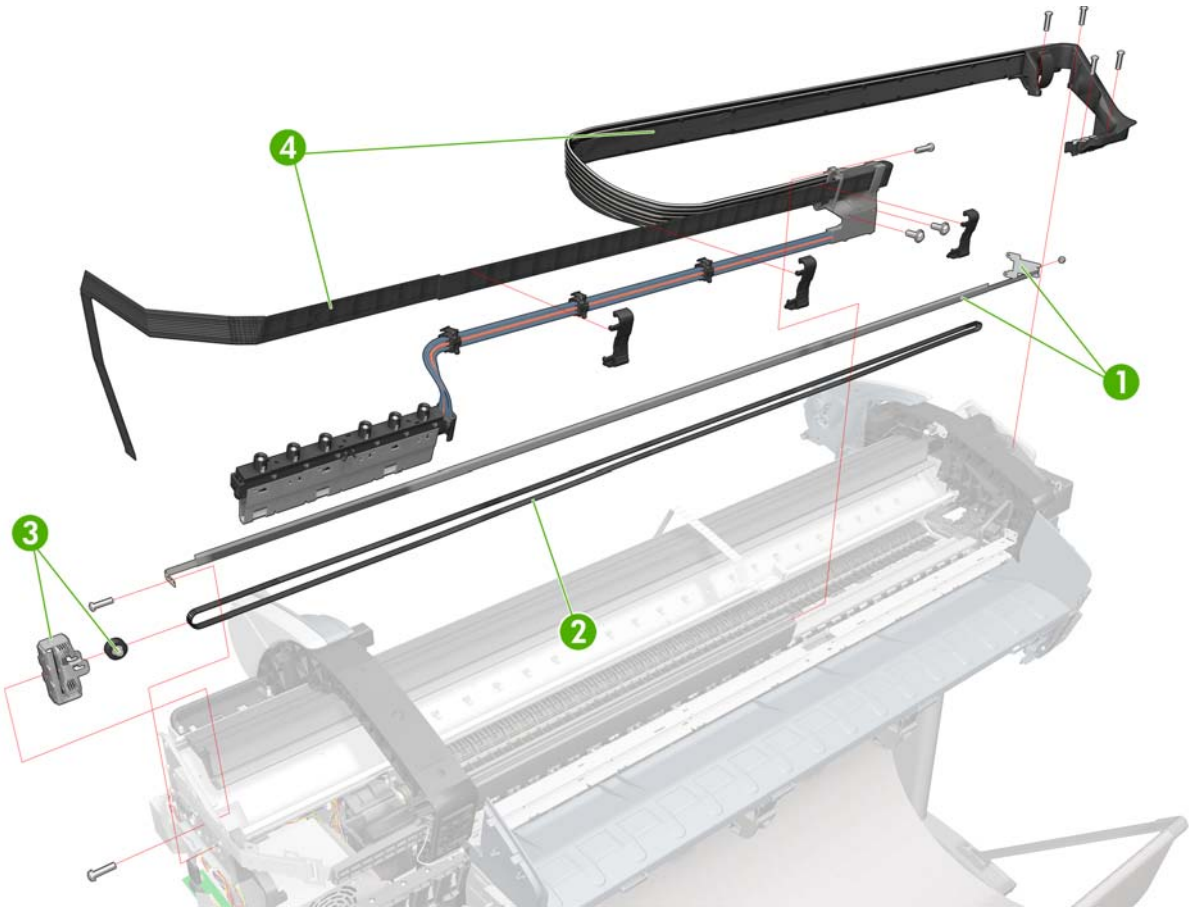

Paper Path Assemblies (Front)

	HP Part Number	Part Description	Printer Model	Cross-reference
1	Q6687-60060	Starwheel Assembly	All 44-in models	Starwheel Assembly on page 375
1	Q6683-60196	Starwheel Assembly	All 24-in models	Starwheel Assembly on page 375
2	Q6677-60018	Print Zone Overdrive	All 44-in models	Print Zone Overdrive on page 333
2	Q6675-60042	Print Zone Overdrive	All 24-in models	Print Zone Overdrive on page 333
3	Q5669-67054	Starwheel Support Assembly	All	
4	Q6659-60182	Full Bleed Foam Kit	All	Full Bleed Foam on page 277
5	CH538-67064	Bumper Cutter Actuator (Left and Right)	All	

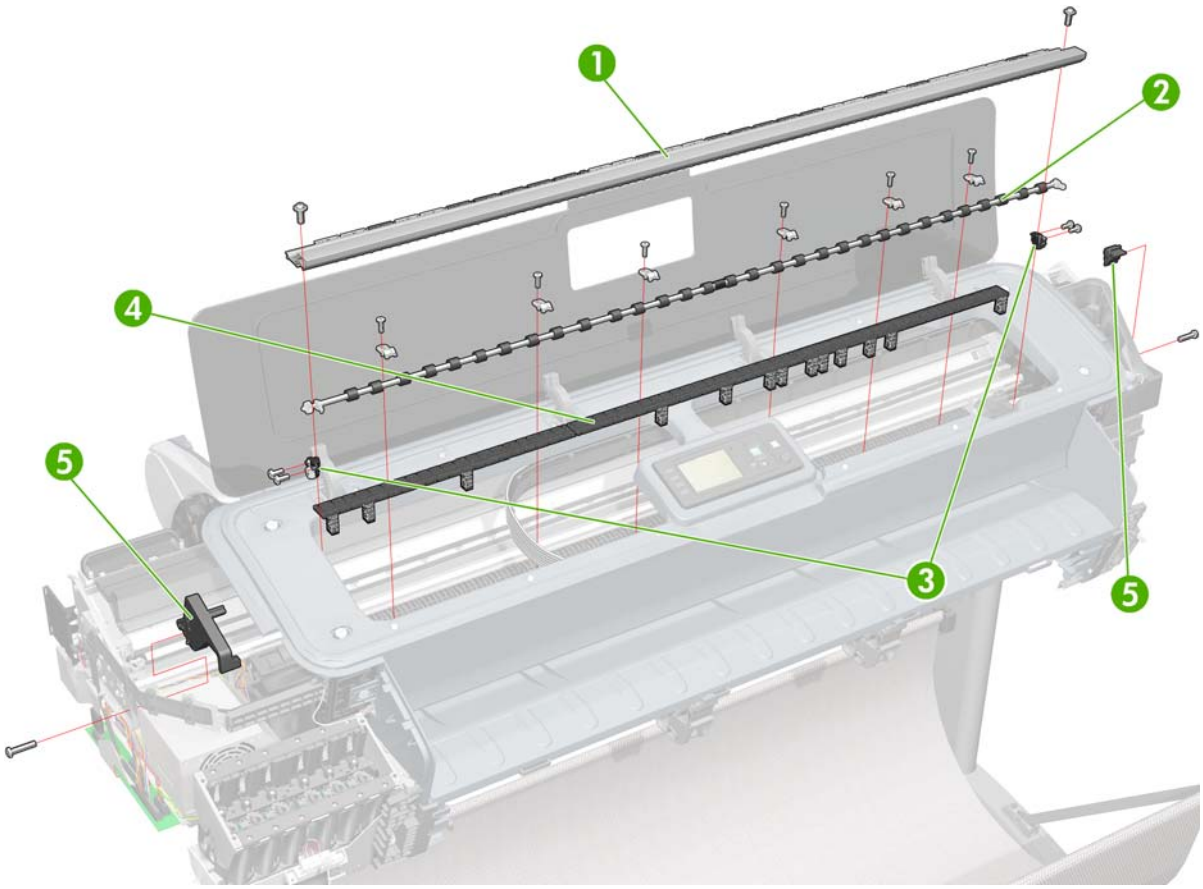

Paper Path Assemblies (Rear)

	HP Part Number	Part Description	Printer Model	Cross-reference
1	Q6687-60085	Pinchwheel Assembly	All	Pinchwheel Assembly on page 325
2	Q6677-60019	Left Roll Guide	All 44-in models	Roll Guide, Left on page 352
3	Q6687-67001	Spindle (CSR A)	All 44-in models	Spindle on page 373
3	CQ305-60020	Spindle (CSR A)	All 24-in models	Spindle on page 373
4	Q6675-60044	Right Roll Guide	All	Roll Guide, Right on page 353
5	Q6675-60093	3-inch Core Adaptors (2)	All	Roll Guide, Right on page 353

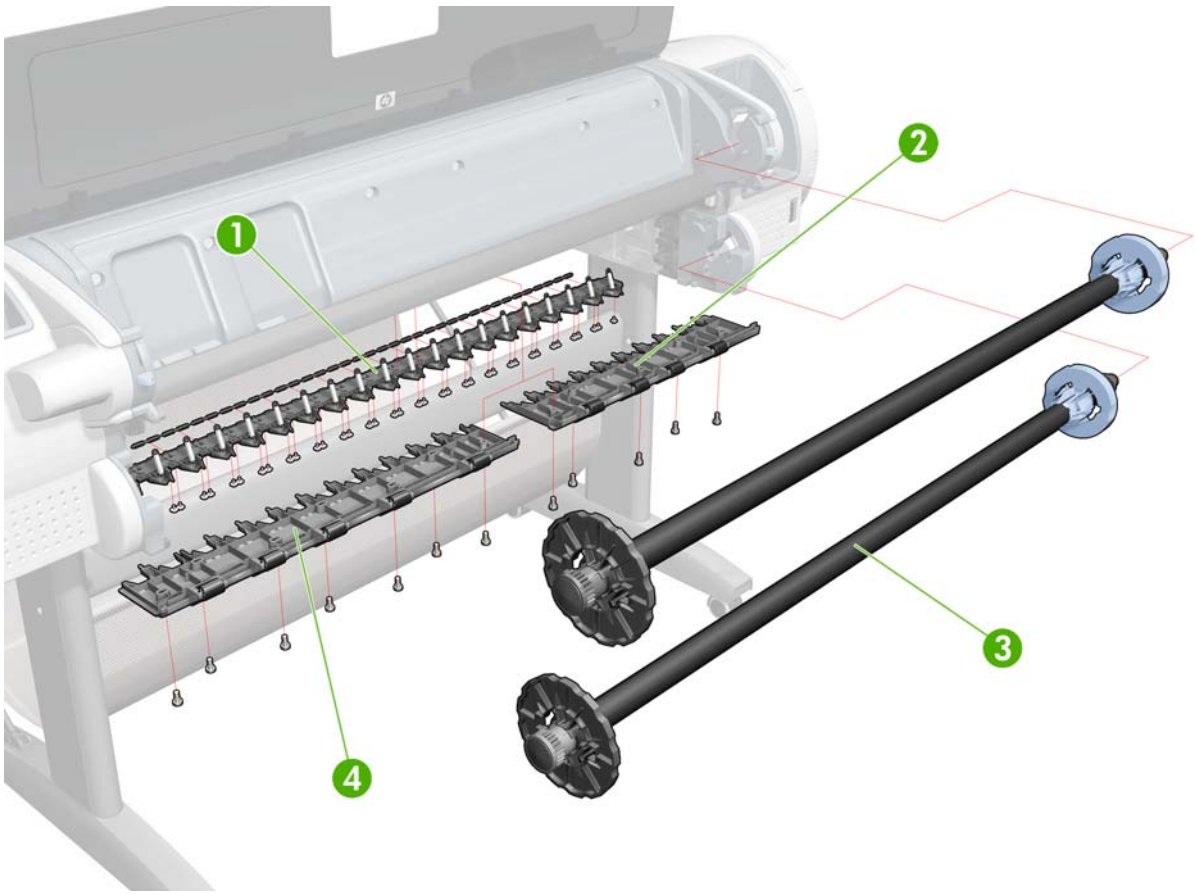

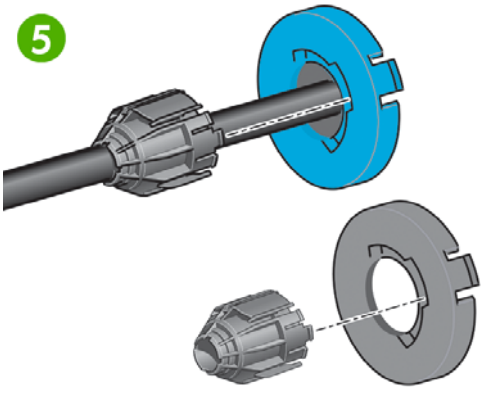

Roll Supports

	HP Part Number	Part Description	Printer Model	Cross-reference
1	CH538-67028	Upper Right Support	All	Roll Support, Upper Right on page 361
2	CH538-67015	Upper Left Support	T1200 44 in	Roll Support, Upper Left on page 359
2	CH539-67007	Upper Left Support without Sensor	T770, T1200 24 in	Roll Support, Upper Left on page 359
3	CH538-67065	Upper Left Support Sensor with Cable	T1200 44 in	Roll Support Sensor, Upper Left (T1200 only) on page 358
4	CH538-67046	Wall Spacers, Left and Right	All	Wall Spacers on page 391
5	CH538-67041	Lower Left Support Sensor with Cable	T1200 44 in	Roll Support Sensor, Lower Left (T1200 only) on page 357
6	CH538-67016	Lower Left Support	T1200 44 in	Roll Support, Lower Left (T1200 only) on page 354
7	CH538-67052	Lower Roll Support Bumpers, Left and Right	T1200 44 in	Bumpers, Left and Right on page 197
8	CH538-67051	Upper Roll Support Bumpers, Left and Right (CSR A)	All	Bumpers, Left and Right on page 197
9	CH538-67029	Lower Right Support	T1200 44 in	Roll Support, Lower Right (T1200 only) on page 355
10	CH538-67033	Single Sheet Sensor	All	Single-sheet Sensor on page 371

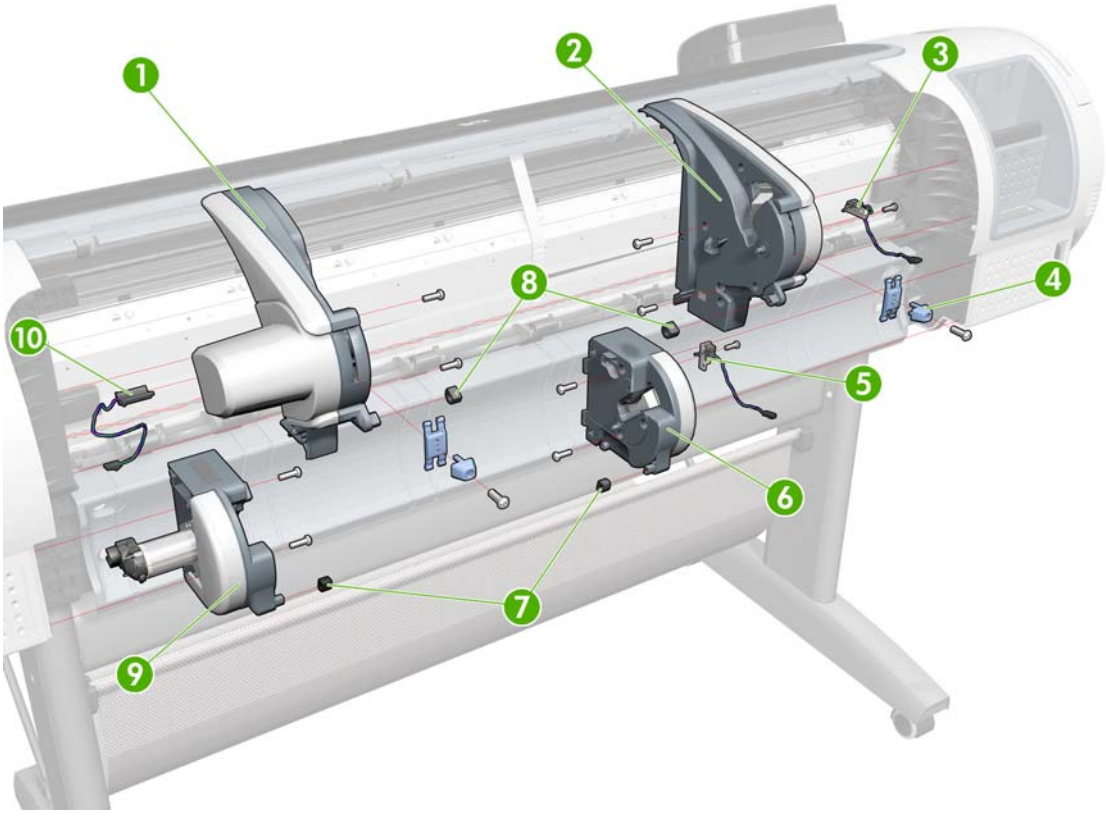

Tools 1

	HP Part Number	Part Description	Printer Model
1	Q6675-67018	Media Driver Tool Kit (includes the Handle for Media Driver Tool Support and the Media Driver Adjustment Tool)	All
2	Q5669-60690	Flex Contacts Cleaning Tool (CSR A)	All
3-4	Q6687-60084	Pinchwheel Insertion Tool	All

1

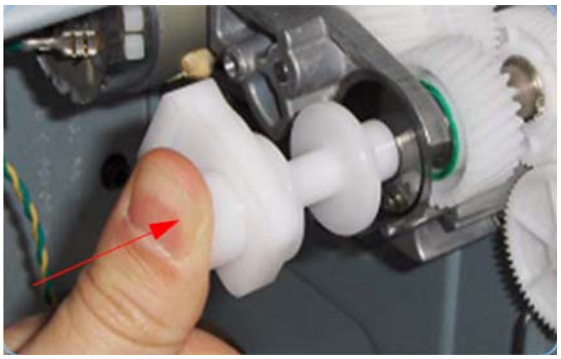

2

3

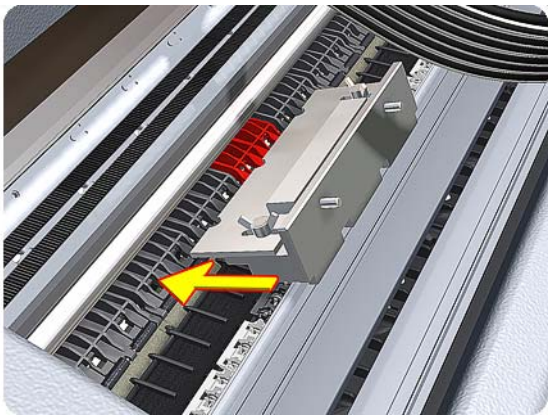

4

Tools 2

	HP Part Number	Part Description	Printer Model
5	Q6675-67017	Spanner Tool	All
6	Q6683-67001	Tool Kit (includes pinchwheel alignment tool, paper driver tool, spanner # 13, oil dispenser, insert spring tool, tweezers, T15 screwdriver, 100 cc isopropyl alcohol, lubricant oil, plastic gloves, flex contacts cleaning tool and cleaning kit)	All
7	Q5669-60692	Lubrication Kit (CSR A)	All
8	CH538-67047	Bi-stable Spring Left and Right	All

5

6

7

8

Miscellaneous Parts

HP Part Number	Part Description	Printer Model
CH538-67006	Cables Kit	T1200
CH539-67003	Cables Kit	T770 44 in
CQ305-60014	Cables Kit	T770 24 in
CH538-67020	Serial Number Label (CSR A)	All
CH538-67024	Preventive Maintenance Kit #1	All 44-in models
CQ305-60017	Preventive Maintenance Kit #1	All 24-in models
CH538-67040	Preventive Maintenance Kit #2	All
Q6687-60093	Paper Advance Calibration Kit (CSR A)	All 44-in models
Q6683-60241	Paper Advance Calibration Kit (CSR A)	All 24-in models
CK837-67008	Harness Cables, Left and Right	All
Q6675-67004	Ink System Purgers (6 units) (CSR A)	All
Q6675-67005	Ink System Purgers (100 units)	All
CH538-67005	Left Side Panel SV	T1200 44 in
CH539-67002	Left Side Panel SV	T770, T1200 24 in
CH538-67019	Cutter Assembly with Screw SV	All
CH538-67037	Pinch Arm Assembly for Roll Cover SV	T1200 44 in
CH538-67050	Roll Cover Freewheel SV	All 44-in models
CH538-67051	Roll Cover Upper Bumper Left and Right SV	All
CH538-67053	Support Label CN375-80001 Nameplate SV (CSR A)	All
CH538-67054	Support Label CH538-80023 Nameplate SV (CSR A)	All
CH539-67019	Support Label CH539-80001 Nameplate SV (CSR A)	All
CH539-67020	Support Label CK834-80001 Nameplate SV (CSR A)	All
CQ305-60021	Support Label + Nameplate SV (CSR A)	T770 24 in
CQ305-60022	Support Label + Nameplate SV (CSR A)	T770 HD 24 in
CH538-67049	Support and Cables for External Hard Disk Drive (CSR A)	T1200

6 Removal and Installation

- Introduction on page 180
- Service Calibration Guide to Removal and Installation on page 184
- Belt Assembly on page 187
- Bin Assembly on page 188
- Bi-stable Springs (T1200 only) on page 191
- Bumpers, Left and Right on page 197
- Cable Harness on page 200
- Carriage and Cutter Assembly on page 208
- Carriage Bushing, Rear on page 217
- Carriage Cover and Carriage Latch on page 219
- Carriage Rail Oiler on page 224
- Carriage PCA on page 226
- Cleanout on page 231
- Converger on page 233
- Cover, Front on page 235
- Cover, Left on page 236
- Cover, Rear on page 240
- Cover, Right on page 241
- Cover, Top on page 244
- Cutter Assembly on page 247
- Drop Detector on page 251
- EE Box on page 253
- Electronics Module Main PCA and PSU on page 256
- Encoder Disk and Encoder Sensor on page 260
- Encoder Strip on page 262
- Encoder Strip, spring and attachment nut on page 263

- Formatter on page 266
- Freewheel Assembly on page 267
- Front Panel on page 270
- Front Trim, Left on page 273
- Front Trim, Right on page 275
- Full Bleed Foam on page 277
- Hard Disk Drive on page 278
- Ink Cartridge Door, Left on page 279
- Ink Cartridge Door, Right on page 281
- Ink Supply Station, Left on page 283
- Ink Supply Tubes on page 287
- Ink Supply Tubes Support Rail on page 294
- Line Sensor on page 296
- Media Advance Drive on page 302
- Media Lever on page 309
- Media Lever Position Sensor on page 311
- Media Output Assembly on page 313
- Out-of-paper Sensor on page 315
- Panel, Left on page 318
- Pen to Paper Space (PPS) Solenoid on page 320
- Pinch Arm Assembly (T1200 only) on page 322
- Pinchwheel Assembly on page 325
- Print Zone Overdrive on page 333
- PSU on page 337
- Real-time Clock Battery on page 339
- Roll Cover Bumpers, Lower on page 340
- Roll Cover Bumpers, Upper on page 343
- Roll Cover, Lower (T1200 only) on page 346
- Roll Cover, Upper on page 350
- Roll Guide, Left on page 352
- Roll Guide, Right on page 353
- Roll Support, Lower Left (T1200 only) on page 354

- Roll Support, Lower Right (T1200 only) on page 355
- Roll Support Sensor, Lower Left (T1200 only) on page 357
- Roll Support Sensor, Upper Left (T1200 only) on page 358
- Roll Support, Upper Left on page 359
- Roll Support, Upper Right on page 361
- Scan-axis Motor on page 363
- Service Station on page 367
- Single-sheet Sensor on page 371
- Spindle on page 373
- Spittoon, Left on page 374
- Starwheel Assembly on page 375
- Starwheel Lifter, Left on page 377
- Starwheel Lifter, Right on page 379
- Starwheel Motor on page 382
- Trailing Cable on page 384
- Wall Spacers on page 391
- Window on page 394
- Window Position Sensor on page 398

Introduction

This chapter is a step-by-step guide to the removal and installation of the key components of the printer. You may find it useful to check off the steps as they are performed. Use the illustrations for each procedure to identify the parts referred to in the text.

NOTE: Before using this chapter to remove and install a new component, always make sure that you have performed the relevant service test from Chapter 4. If the test passes you will not need to replace the component.

Safety Precautions

Review the instructions identified by WARNING and CAUTION symbols before you service the printer. Follow these warnings and cautions for your protection and to avoid damaging the printer.

NOTE: Serious shock hazard leading to death or injury may result if you do not take the following precautions:

- Ensure that the ac power outlet (mains) has a protective earth (ground) terminal.
- Switch the plotter off, and disconnect it from the power source prior to performing any maintenance.
- Prevent water or other liquids from running onto electrical components or circuits, or through openings in the module.

Electrostatic Discharge (ESD) Precautions

To prevent damage to the printer circuits from high-voltage electrostatic discharge (ESD):

1. Do not wear clothing that is subject to static build-up.
2. Do not handle integrated circuits (ICs) in carpeted areas.
3. Do not remove an IC or a printed circuit assembly (PCA) from its conductive foam pad or conductive packaging until you are ready to install it.
4. Ground (earth) your body while disassembling and working on the printer.
5. After removing a cover from the printer, attach an earthing (ground) lead between the PCA common and earth ground. Touch all tools to earth ground to remove static charges before using them on the printer.
6. After removing any PCA from the printer, place it on a conductive foam pad or into its conductive packaging to prevent ESD damage to any ICs on the PCA.

Required Tools

All the special tools and equipment required to disassemble, service and repair the printer are provided in the Toolkit P/N Q6683-67001. Some tools can be ordered separately from the toolkit. See Tools 1 on page 174 and Tools 2 on page 175.

The Toolkit contains the following tools:

Description/Comments	HP Part Number
13 mm Combination Spanner	Q6675-67011
Alcohol	Q6675-60091

Description/Comments	HP Part Number
Allen Key #2	Q6675-60041
Cleaning Cloth	9300-2531
Flex Contacts Cleaning Support	Q1271-40384
Lubricant Oil	Q6675-60090
Media Driver Adjustment Tool	Q6675-67009
Handle for Media Driver Tool Support	Q6675-67010
Spanner	Q6675-67011
Oil Dispenser	Q6675-60062
Manual Pinch Arm Alignment Tool	Q5669-20595
Spring Insertion Tool	Q5669-20594
Protective Plastic Gloves	Q6675-60035
Screwdriver	8710-2456
Tweezers	Q6675-60037
T Series Cleaning Assembly	C6071-60218

You will also need the following standard hand tools:

Description/Comments	Size
Long Torx Screwdriver	1/4 inch drive
Torx Bit (75 mm)	8
	10
	15
	20
Philips Screwdriver	1
Pliers	N/A
Snips	N/A
Pipe Spanner	5.5 mm
Flat-bladed Screwdriver	N/A

Customer Self Repair parts

Some printer parts are designated Customer Self Repair (CSR) parts, which means that a faulty part can be replaced by the customer. Non-CSR parts need to be replaced by an engineer. There are two categories of CSR parts:

- CSR A: Customer self-repair is mandatory, as mentioned in the printer's warranty statement. If HP is asked to replace such parts, the customer will be charged for travel and labor costs. Parts should be replaceable by end users (customers) from a mechanical perspective within 5 minutes, with simple or no tools required. Examples include spindles and cartridges.
- CSR B: Parts are easy to replace, but some knowledge of the product and technical skills may be required. The customer can decide whether to replace the part or to call for an engineer.

The CSR parts are listed below.

Part number	Description	CSR type	In box
CH538-67005	T1200 Left Side Panel SV (see Left side panel (T1200) on page 419)	B	Yes
CH539-67002	T770 Left Side Panel SV	B	Yes
CQ305-60021	T770 24 Support Label + nameplate SV	A	No
CQ305-60022	T770 24 HDD Support Label + nameplate SV	A	No
Q5669-60690	Flex Contacts Cleaning Tool SV	A	No
Q5669-60692	Troja Lubrication Kit SV	A	No
Q6683-60241	Paper Advance Calibration T Se	A	No
Q6687-60093	Paper Advance Calibration T Se	A	No
CH538-67019	T1200/T770 Cutter Assy w/ screw SV (see Cutter assembly on page 413)	A	Yes
CH538-67050	T1200/T770 Roll Cover Freewheel SV (see Freewheel assembly on page 415)	A	Yes
Q5669-60710	Spindle 24 SV	A	No
Q6659-60183	Spindle 44 SV	A	No
Q6675-60093	3" Adaptor kit - Troja Service	A	No
CQ305-60020	T770 24 Spindle SV	A	No
CH538-67020	T1200/ T770 Serial Label SV	A	No
CH538-67049	T1200 Support & cables for removable HDD	A	No
CH538-67053	Support Label CN375-80001 nameplate SV	A	No
CH538-67054	Support Label CH538-80023 nameplate SV	A	No
CH539-67019	Support Label CH539-80001 nameplate SV	A	No
CH539-67020	Support Label CK834-80001 nameplate SV	A	No
Q5669-60718	Leg Cover SV	A	No
Q5669-60719	Bin Assembly 24 SV	A	No
Q6659-60237	Bin Assembly 44 SV	A	No
Q5669-60730	Hardware Kit SV	A	No

Part number	Description	CSR type	In box
Q5669-67063	Basket Tubes + Adaptors Servic	A	No
Q6675-67004	Ink System Purgers (6 units)	A	Yes
CH538-67037	T1200 Pinch Arm Assembly for Roll Cover SV (see Pinch arm assembly on page 421)	A	Yes
CH538-67051	T1200/T770 Roll Cover Upper Bumpers (see Roll cover upper bumpers on page 425)	A	Yes

For further information

- CSR Corporate Standards: http://standards.corp.hp.com/smc/hpstd/AHP0001501.htm
- CSR Web site: http://www.hp.com/go/csrparts/
- CSR Parts Availability (EasiTool): https://easitool.atlanta.hp.com/
- HP Parts Page: http://partpage.corp.hp.com/default.asp

Service Calibration Guide to Removal and Installation

Using the Service Calibration Guide

When you remove most printer components, you will need to perform a particular set of Service Calibrations and Diagnostic tests to ensure proper printer performance.

The Service Calibration Table explains which service calibrations and diagnostic tests need to be performed whenever you remove and install particular printer components.

The calibrations and tests must be performed in the order in which they are listed.

NOTE: Even if you do not replace the removed component with a new component, you still need to perform the calibrations indicated in the table.

The Service Calibration Table

Component	Service calibrations and tests
Belt Assembly	Carriage Assembly, Scan Axis, Line Sensor Calibration. After replacement, reset Life Counters.
Carriage Assembly	Carriage Assembly, Scan Axis, Line Sensor Calibration, Cutter. After replacement, reset Life Counters.
Carriage Cover	Carriage Assembly, Line Sensor Calibration, Electronics Module.
Carriage Latch	Carriage Assembly, Line Sensor Calibration, Electronics Module.
Carriage PCA	Carriage Assembly, Line Sensor Calibration, Electronics Module.
Carriage Rear Bushing	Carriage Assembly, Scan Axis, Line Sensor Calibration, Cutter.
Cleanout Assembly	Carriage Assembly.
Cover, Top	Electronics Module.
Cutter Assembly	Cutter.
Drop Detector	Reset Calibration Flag, Drop Detector Calibration, Service Station.
Encoder Disk	Paper Drive, Paper Advance Calibration, Electronics Module.
Encoder Sensor	Paper Drive, Paper Advance Calibration, Electronics Module.
Encoder Strip	Scan Axis.
Formatter	Electronics Module.
Front Panel	Electronics Module.
Hard Disk Drive	Electronics Module.
Ink Supply Station, Left	Ink Delivery System. After replacement, reset Life Counters.
Ink Supply Station, Right	Ink Delivery System.
Ink Supply Tubes Support Rail	Electronics Module, Sensors.
Line Sensor	Line Sensor Calibration, Electronics Module.
Main PCA	Electronics Module.
Media Advance Drive	Paper Drive, Paper Advance Calibration, Electronics Module.

Component	Service calibrations and tests
Media Advance Roller	Paper Drive, Paper Advance Calibration, Electronics Module, Sensors.
Media Lever Position Sensor	Sensors.
Out-of-paper Sensor	Carriage Assembly.
Pen to Paper Space (PPS) Solenoid	PRS.
Pinch Roller	Paper Drive, Sensors.
Pinchwheel Assembly	Paper Drive, Sensors.
Power Supply Unit	Electronics Module.
Preventive Maintenance Kit #1	Carriage Assembly, Scan Axis, Line Sensor Calibration, Sensors. After replacement, reset Life Counters.
Preventive Maintenance Kit #2	Service Station, Drop Detector Calibration. After replacement, reset Life Counters.
Primer Assembly	Service Station, Drop Detector Calibration.
Print Zone Overdrive	Starwheel Lifter.
Roll Guide, Left and Right	Carriage Assembly.
Roll Support, Right	Rewinder, Paper Advance Calibration.
Scan-Axis Motor	Carriage Assembly, Scan Axis, Line Sensor Calibration. After replacement, reset Life Counters.
Service Station	Reset Calibration Flag, Drop Detector Calibration, Service Station. After replacement, reset Life Counters.
Service Station Spittoon	Service Station, Drop Detector Calibration.
Single Sheet Sensor	Sensors.
Starwheel Assembly	Starwheel Lifter.
Starwheel Lifter, Left	Starwheel Lifter, Electronics Module.
Starwheel Lifter, Right	–
Starwheel Motor	Starwheel Lifter, Electronics Module.
Support Sensor, Upper and Lower Left	Sensors.
Trailing Cable and Ink Supply Tubes	Carriage Assembly, Electronics Module, Scan Axis, Line Sensor Calibration. After replacement, reset Life Counters.
Window Position Sensor	Carriage Assembly, Electronics Module, Sensors.

Performing the Service Calibrations and Diagnostic Tests

When you are ready to perform the service calibrations and diagnostic tests that correspond to the component you have installed or replaced, consult the following sections for procedures:

- Paper Drive Test on page 104.
- Electronics Module Test on page 106.
- Carriage Assembly Test on page 110.
- Sensors Test on page 113.
- Rewinder Test on page 114.
- Ink Delivery System (IDS) Test on page 116.
- Service Station Test on page 121.
- Paper Advance Calibration on page 148.
- Drop Detector Calibration on page 152.
- Line Sensor Calibration on page 155.

Belt Assembly

Removal

1. Switch off the printer and remove the power cable.
2. Remove the Carriage Assembly. See Carriage Assembly on page 169.
3. Slide the Belt Assembly out of the attachment on the Carriage Assembly.

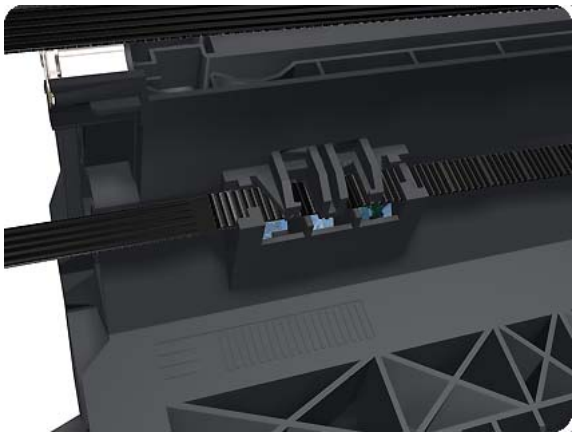

4. Remove the Belt Tensioner Assembly.

NOTE: When you finish installing or replacing this component, you must perform the necessary Service Calibrations. To find which calibrations you must perform, see Service Calibration Guide to Removal and Installation on page 184.

Bin Assembly

Removal

1. Switch off the printer and remove the power cable.
2. Lay out the components of the basket.

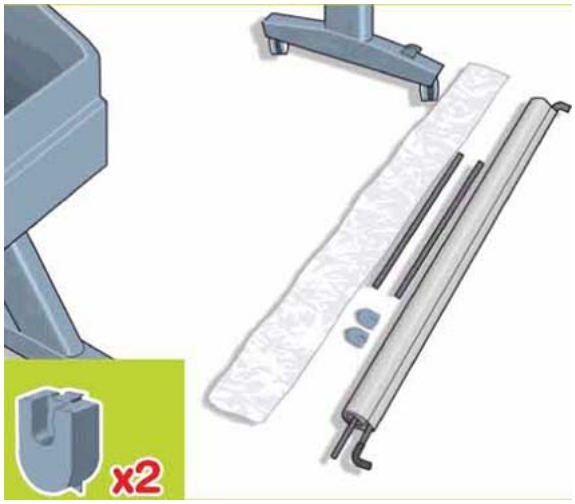

3. Fit the basket supports to the stand legs, one to each leg.

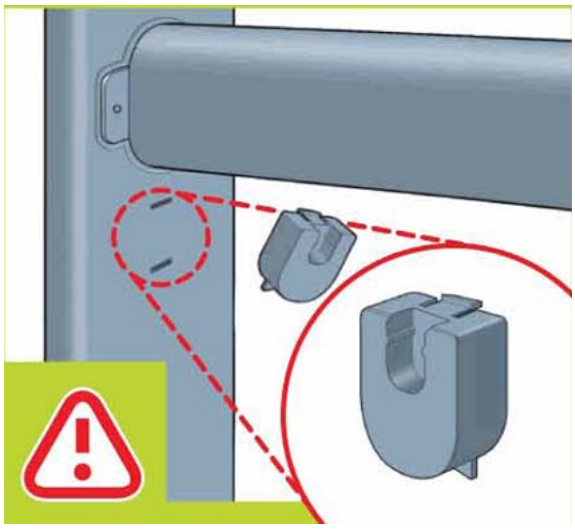

4. Fit the two short tubes to the printer's feet, one on the front of each foot. Each tube should click into place.

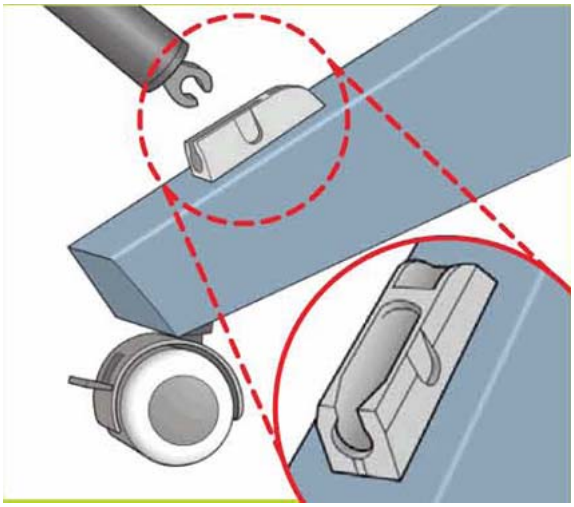

5. Attach the basket's front tubes to the two short tubes on each foot.

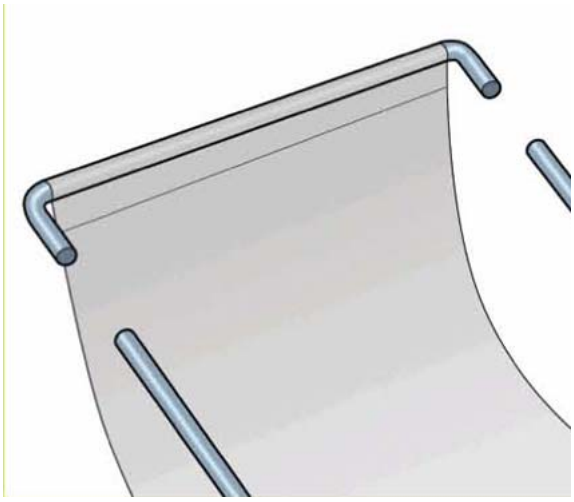

6. Rest the basket's rear tubes on the supports that you have just fitted to each leg of the stand.

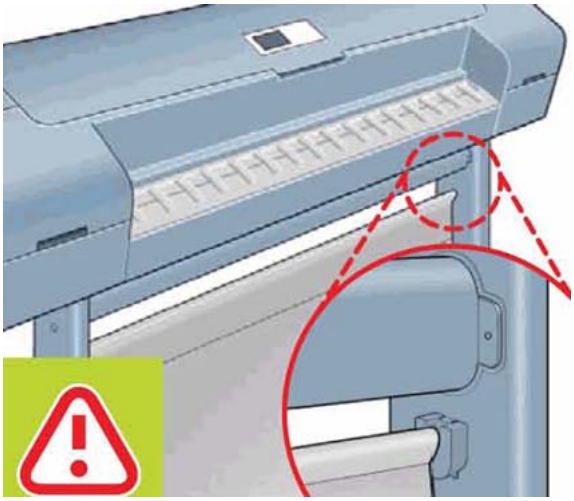

7. The basket is now complete.

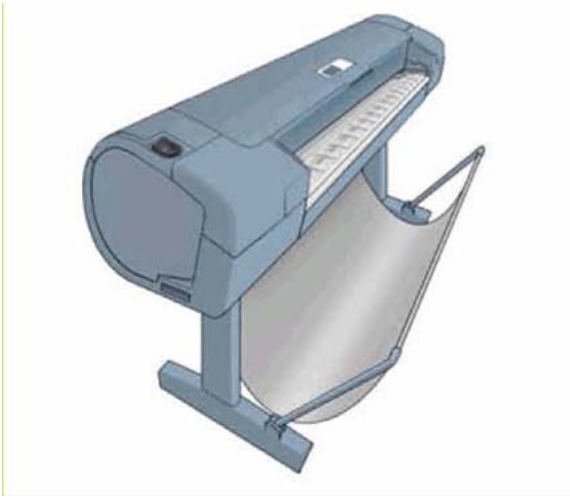

Bi-stable Springs (T1200 only)

These parts should not be replaced by customers.

Removal

1. Remove the Roll Cover, Lower (T1200 only) on page 346.
2. Unscrew the Left Bi-stable Spring from the Lower Roll Cover.

3. Unscrew the Right Bi-stable Spring from the Lower Roll Cover.

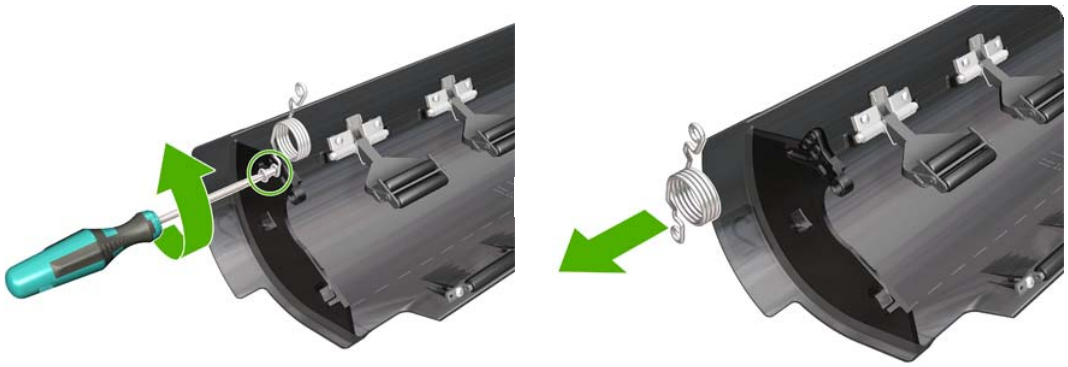

Installation

1. There are two pre-loaded Bi-stable Springs, one for the left side (gold link) and one for the right side (black link). There are two screws for each Bi-stable Spring (total four screws).

2. Screw the right Bi-stable Spring (black link) onto the right side of the Lower Roll Cover.

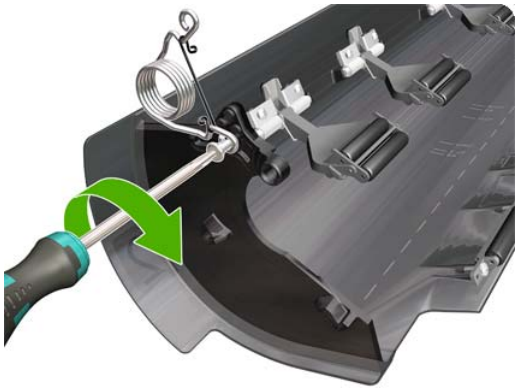

3. Screw the left Bi-stable Spring (gold link) onto the left side of the Lower Roll Cover.

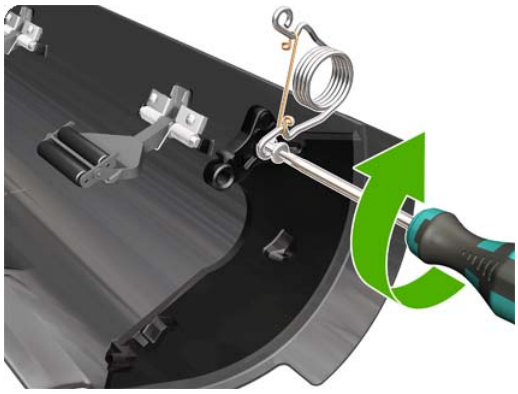

4. Hold the Roll Cover with two hands while mounting it in the Roll Support.
5. Insert the Lower Roll Cover right-side hinge into the Lower Right Roll Support pin.

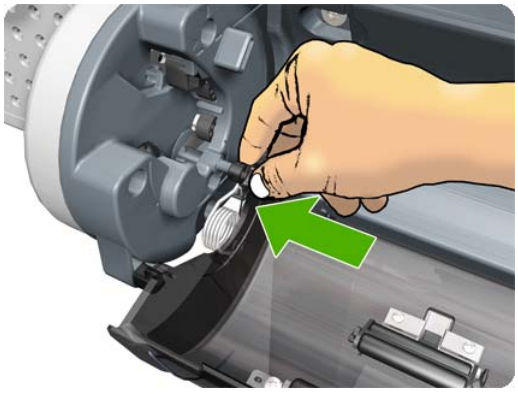

6. Insert the Lower Roll Cover left-side hinge into the Lower Left Roll Support pin.

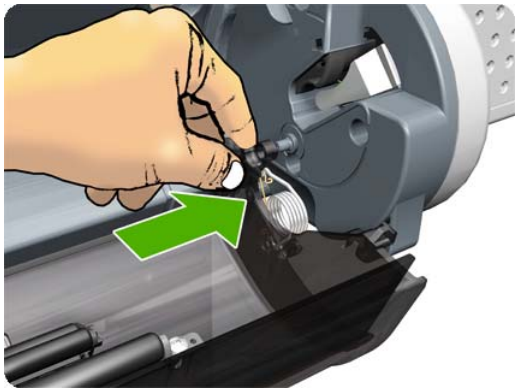

7. Screw the Lower Roll Cover to the Lower Right Roll Support.

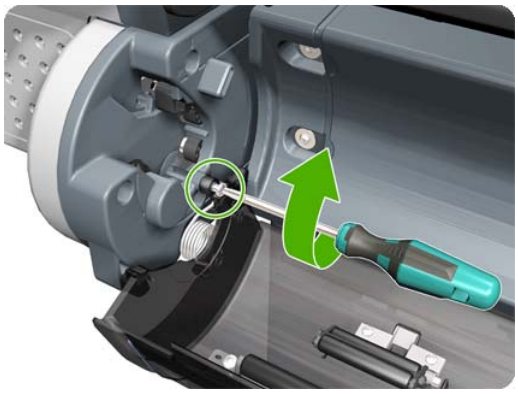

8. Screw the Lower Roll Cover to the Lower Left Roll Support.

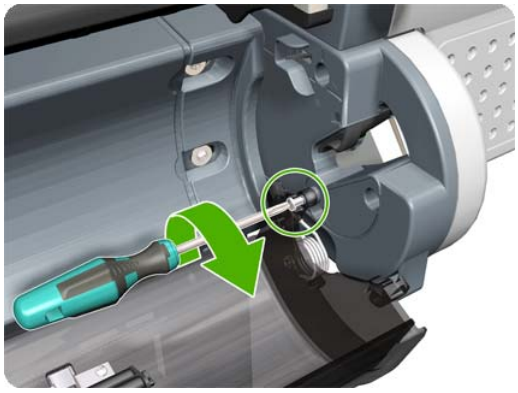

9. Close the Lower Roll Cover until the other end of the Bi-stable Screw is in front of the hole on the Lower Left Roll Support (if necessary, hold the Roll Cover for a moment with your head).

10. Screw the left pre-loaded Bi-stable Spring to the Lower Left Roll Support. Do not let the cover close completely.

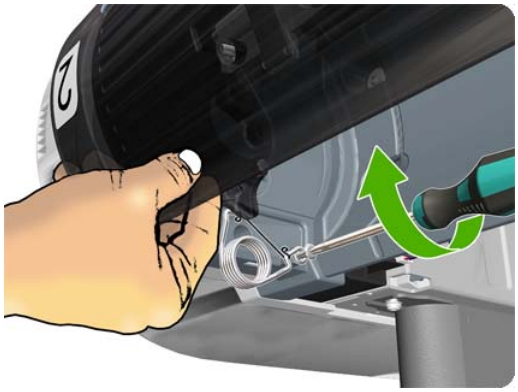

11. Screw the right pre-loaded Bi-stable Spring to the Lower Right Roll Support.

12. Close the Lower Roll Cover completely.

13. Free one end of the right metal link of the right Bi-stable Spring.

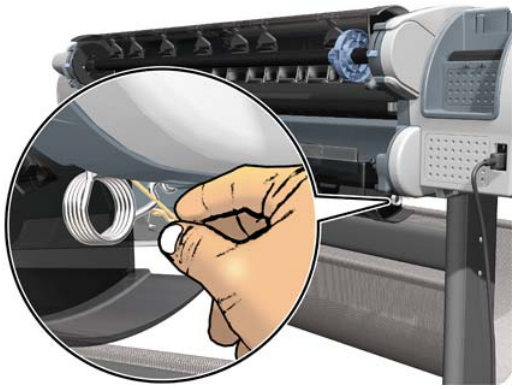

14. Free the other end of the right metal link of the right Bi-stable Spring (if necessary, play slightly with the Lower Roll Cover).

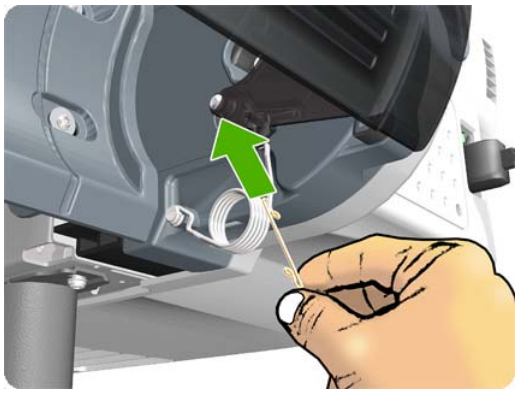

15. Free one end of the left metal link of the left Bi-stable Spring (if necessary, play slightly with the Lower Roll Cover).

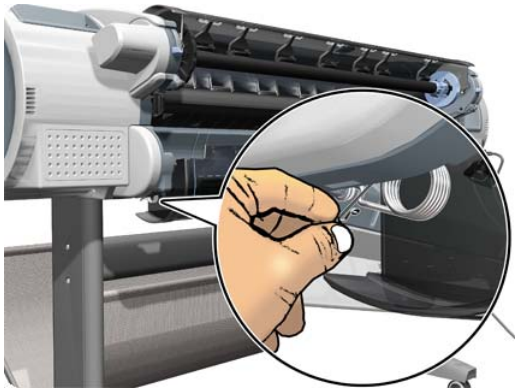

16. Free the other end of the metal link of the left Bi-stable Spring.

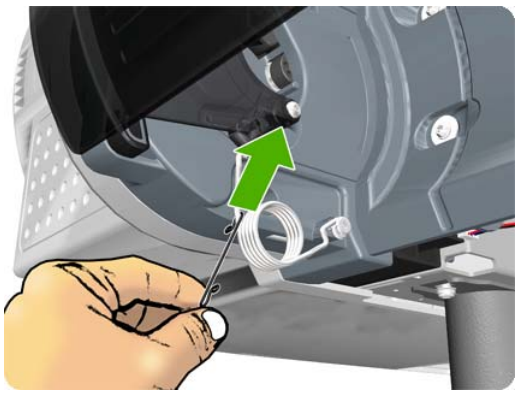

17. Store the metal links that you have removed.

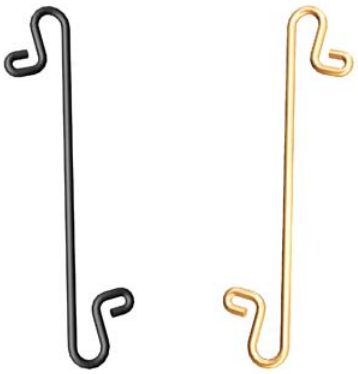

Bumpers, Left and Right

Removal

1. Switch off the printer and remove the power cable.
2. Remove the Cover, Right on page 241.
3. Remove the Cover, Left on page 236.
4. Remove the T-15 screw that secures the right bumper.

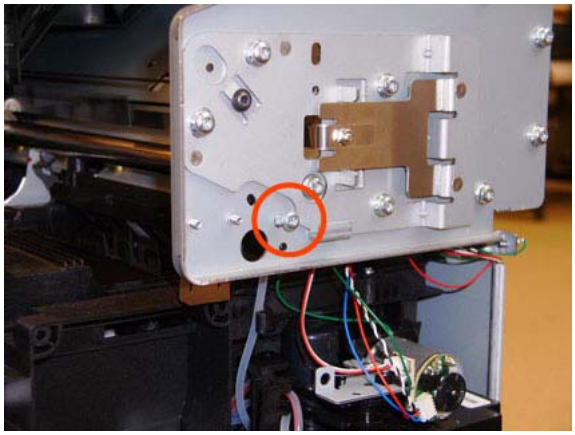

5. Remove the right bumper.

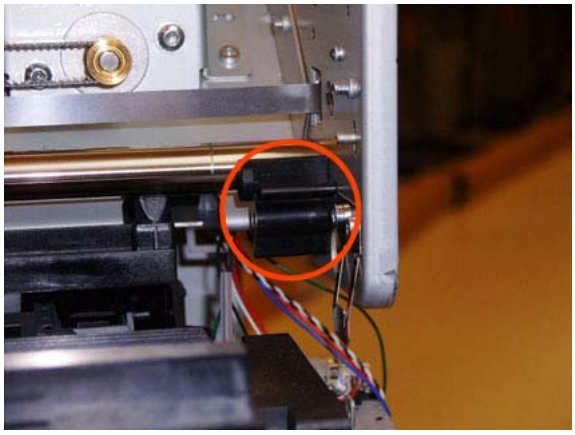

6. Remove the T-15 screw that secures the left bumper.

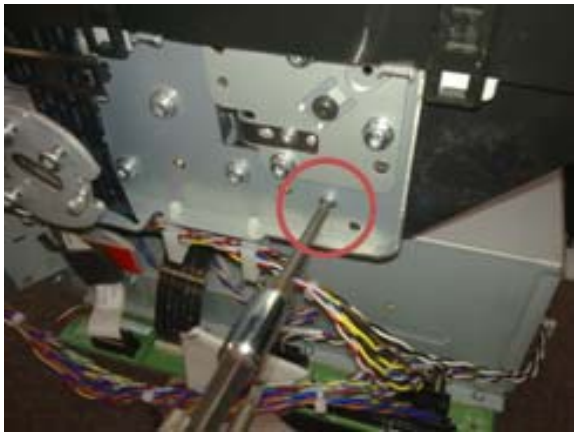

7. Remove the left bumper.

Installation

1. Switch off the printer and remove the power cable.
2. Remove the Cover, Right on page 241.
3. Remove the Cover, Left on page 236.
4. Attach the left bumper. Make sure to snap the bumper on to both parts shown.

5. Secure the left bumper to the printer with a T-15 screw.

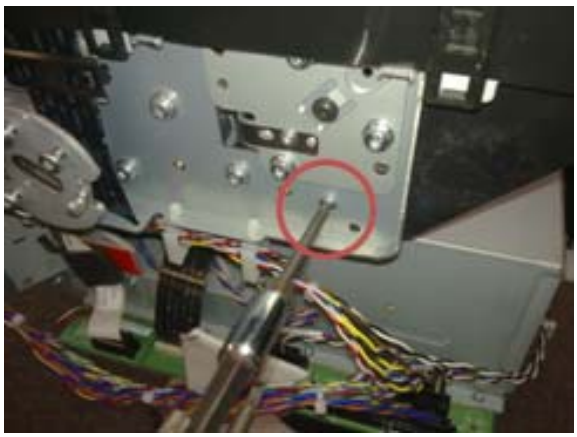

6. Attach the right bumper.

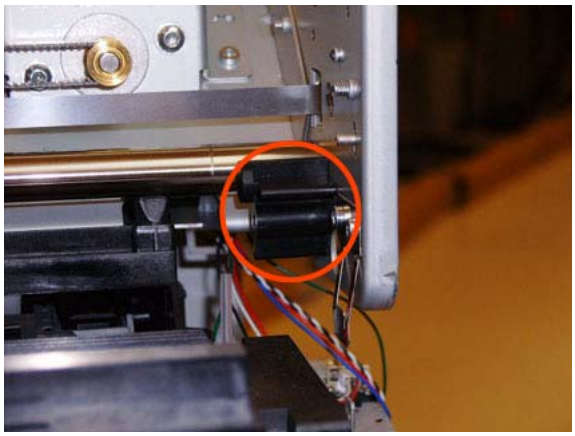

7. Secure the right bumper to the printer with a T-15 screw.

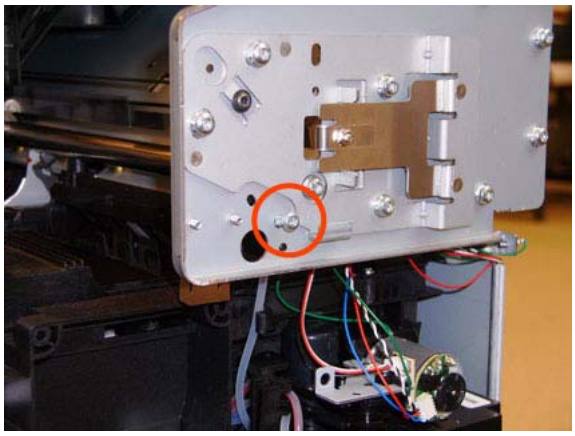

Cable Harness

Removal

1. Remove the Converger on page 233.
2. Remove the Cover, Rear on page 240.
3. Remove the Cover, Left on page 236.
4. Remove the Cover, Right on page 241.
5. Remove the Cover, Top on page 244.
6. Unplug both connectors.

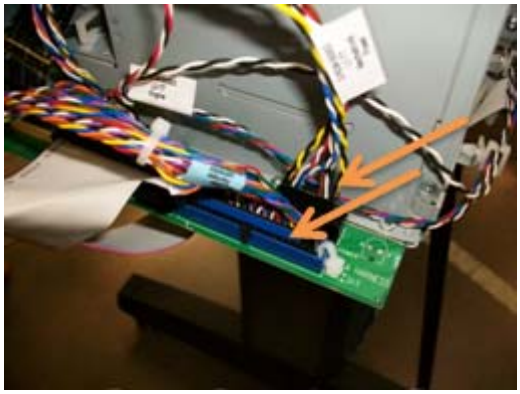

7. Detach both cable branches from their holders.

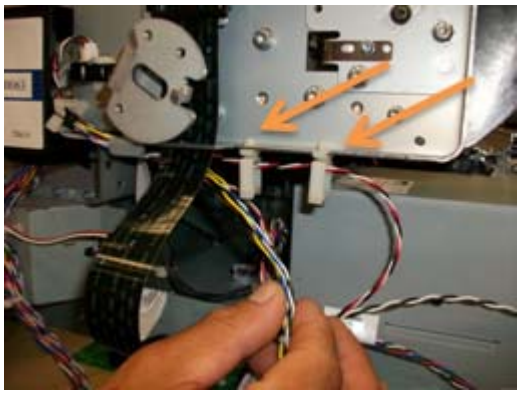

8. Remove the tape from the cable branch.

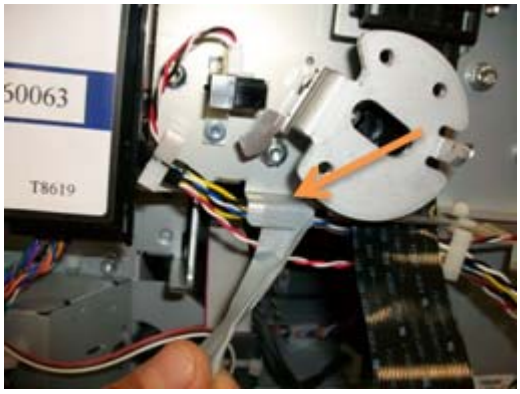

9. Remove the RFID tag support.

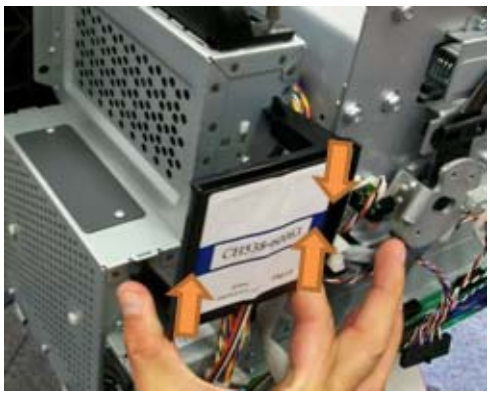

10. Detach both cable branches.

11. Unscrew all nine cable ties from the upper cable branch.

12. Keep the cable ties and screws to for reuse after replacing the cable.

13. Unplug both connectors shown in the picture.

14. Unplug the Window Sensor cable.

15. Pull both upper cable branches under the left arc.

16. Detach the cable from the cable tie.

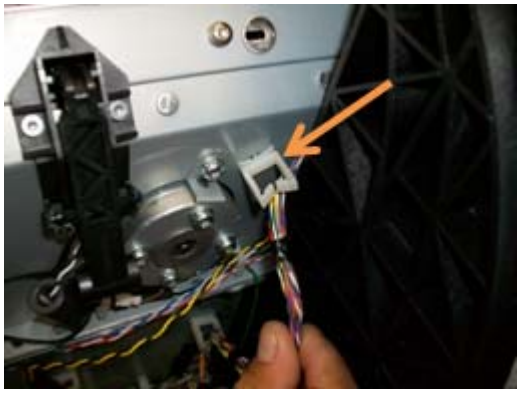

17. Unplug the connector.

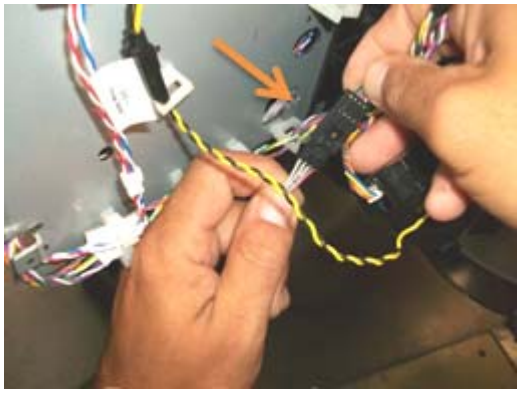

18. Unplug the Media Sensor cable.

19. Unplug two connectors.

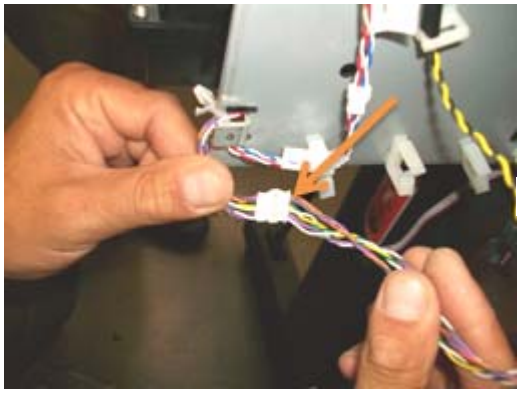

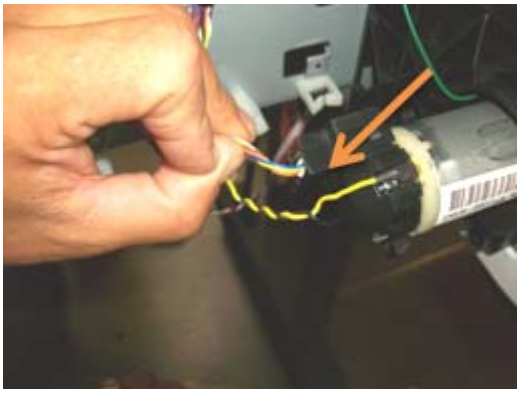

20. Pull the cables under the right arc.

21. Back on the left side, detach the FP harness cable to leave space to detach the lower cable branch.

22. Detach the lower cable branch.

23. Unplug four connectors.

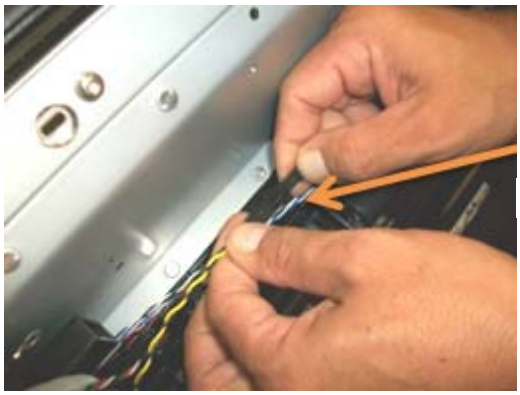

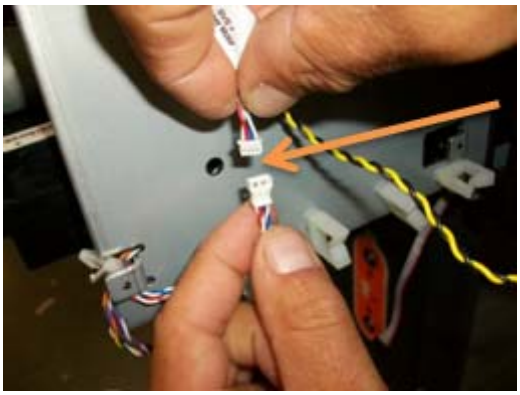

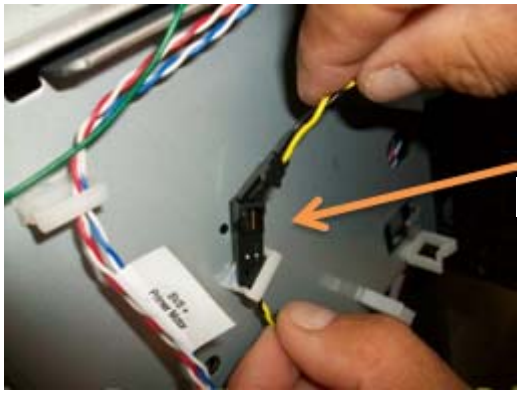

24. Pull the lower cable branch back under the right arc.

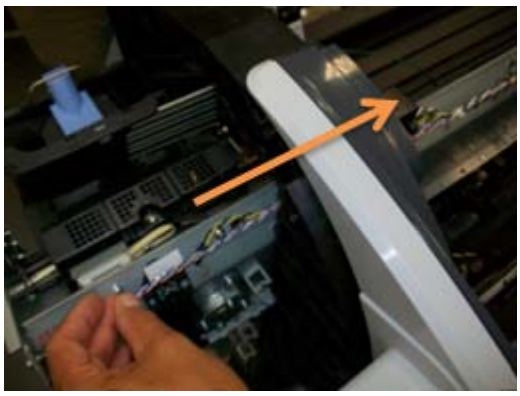

T1200 Cables Kit (CH538-67006) contents

Packaging

- 9211-8017: BOX-CORR SLC
- 9222-3192: SLV-STAT-DISS POLYETH-ANTSTK
- C7769-00200: SVC B BOX LABEL

Cables

- CH538-50001: TT Mechatronic Data Harness
- CH538-50002: TT Mechatronic Power Harness
- CH538-50003: TT Engine Harness
- CH538-50012: TT Front Panel Cable
- CH538-60049: TT Top Rewinder Encoder Cable
- Q6675-50002: ISS Cable Harness Left with fe

T770 44-in Cables Kit (CH539-67003) contents

Packaging

- 9211-8017: BOX-CORR SLC
- 9222-3192: SLV-STAT-DISS POLYETH-ANTSTK
- C7769-00200: SVC B BOX LABEL

Cables

- CH539-50003: TT MINUS Mechatronic Data Harness
- CH539-50002: TT MINUS Mechatronic Power Harness
- CH538-50003: TT Engine Harness
- CH538-50012: TT Front Panel Cable

- CH538-60049: TT Top Rewinder Encoder Cable
- Q6675-50002: ISS Cable Harness Left with fe

T770 24-in Cables Kit (CQ305-60014) contents

Packaging

- 9211-8017: BOX-CORR SLC
- 9222-3192: SLV-STAT-DISS POLYETH-ANTSTK
- C7769-00200: SVC B BOX LABEL

Cables

- CQ305-50003: TT 24 Mechatronic Data Harness
- CQ305-50002: TT 24 Mechatronic Power Harness
- CH538-50003: TT Engine Harness
- CQ305-50001: TT 24 Front Panel Cable
- CH538-60049: TT Top Rewinder Encoder Cable
- Q6675-50002: ISS Cable Harness Left with fe

Carriage and Cutter Assembly

Removal

1. Switch off the printer and remove the power cable.
2. Remove the Cover, Front on page 235.
3. Remove the Cover, Right on page 241.
4. Remove the Cover, Left on page 236.
5. Remove the Front Panel on page 270.
6. Remove the Cover, Top on page 244.
7. Remove the Encoder Strip, spring and attachment nut on page 263.
8. If necessary, manually move the Carriage Assembly fully right into the docking station.
9. Disconnect the ribbon cable of the Trailing Cables from the Electronics Module.

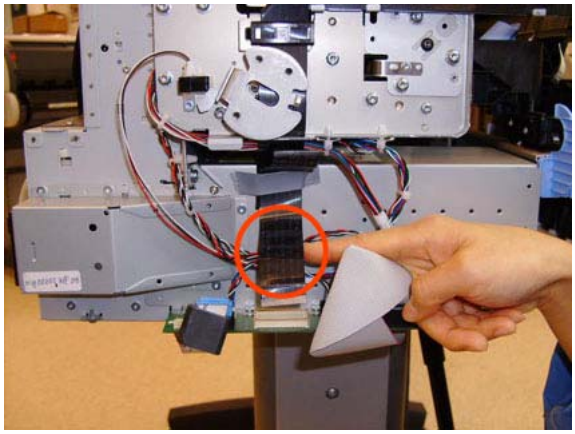

10. Unroute the Trailing Cables.

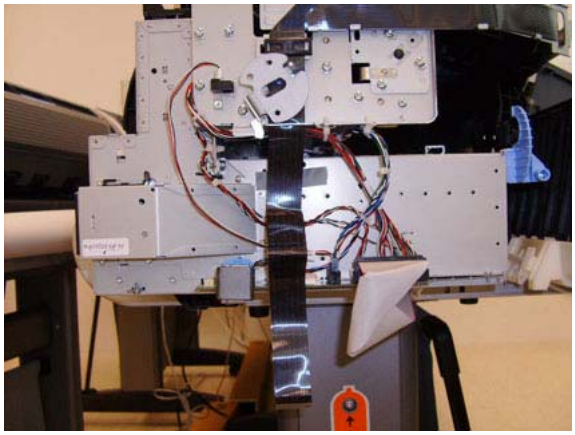

11. Unclip and remove the cable clamp of the Trailing Cables.

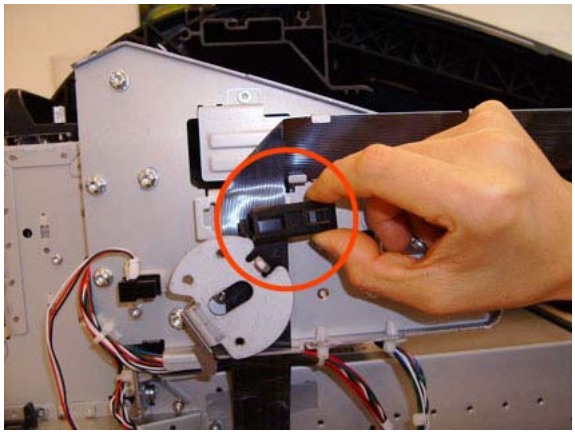

12. Remove 3 Cable Clamps, then unroute the Trailing Cables.

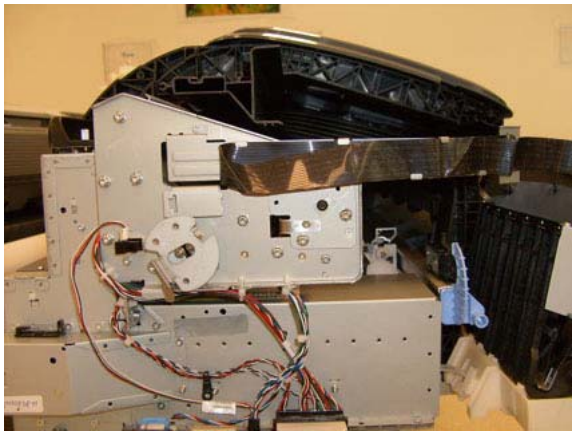

13. Open the Carriage Cover.

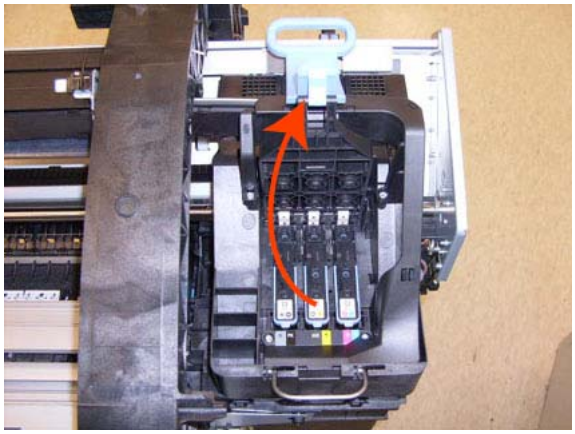

14. Remove all the Printheads.

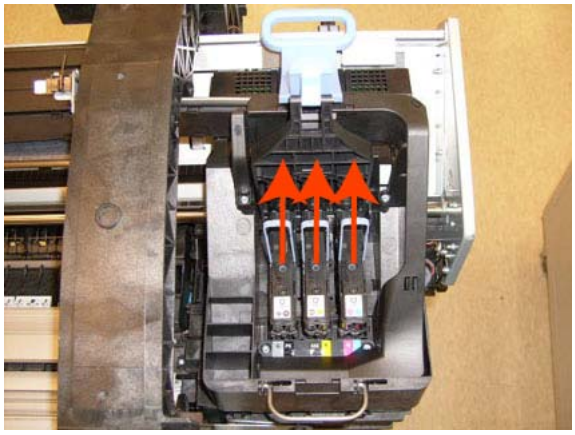

15. Unscrew the small cover of the Carriage PCA.

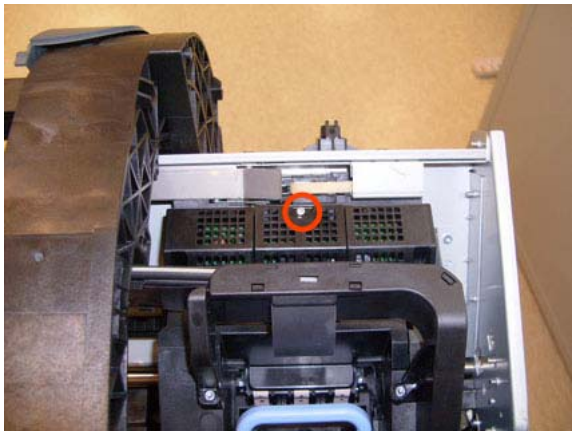

16. Remove the small cover of the Carriage PCA.

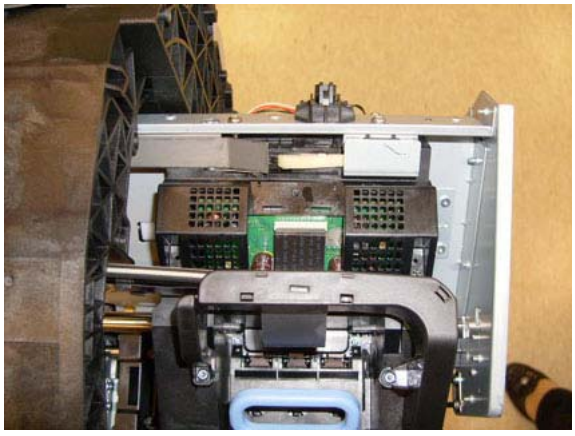

17. Disconnect the ribbon cable of the Trailing Cable from the Carriage PCA.

18. Open the latch, and remove the four T-15 screws that secure the Ink Supply Tubes to the Carriage Assembly.

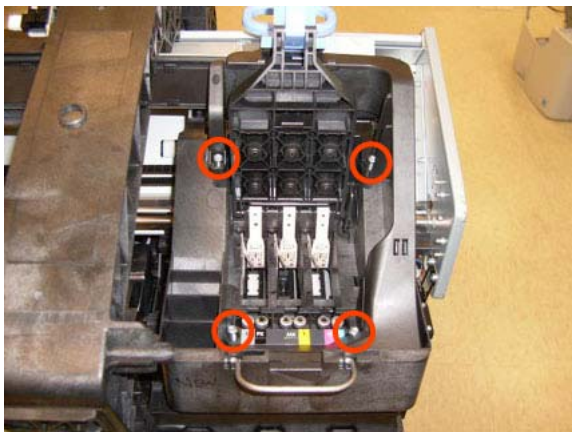

19. Carefully lift out the Ink Supply Tubes and close the carriage cover at the same time.

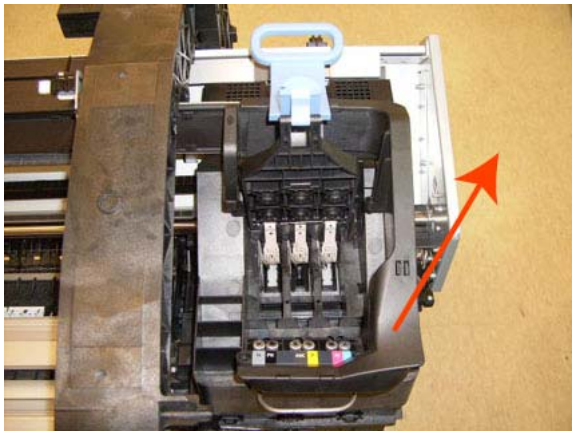

20. Close and lock the Carriage Cover.

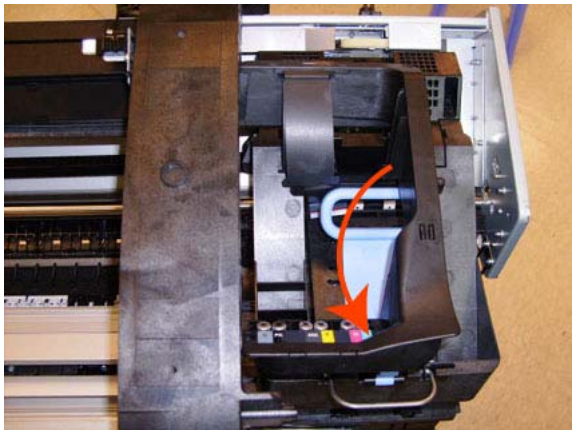

21. Loosen the T-10 uncapping screw sufficiently so you can manually move the Carriage Assembly in step 26.

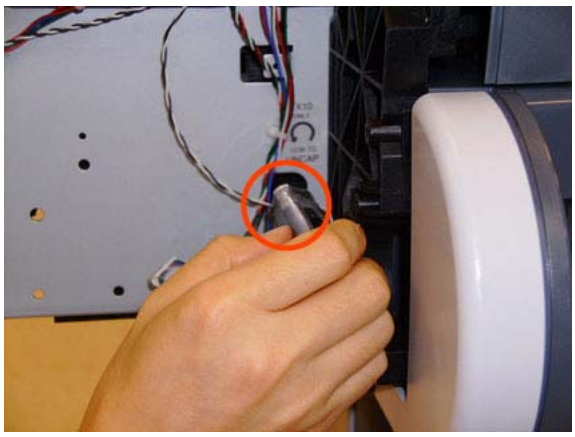

22. Push the Carriage Assembly into the print path.

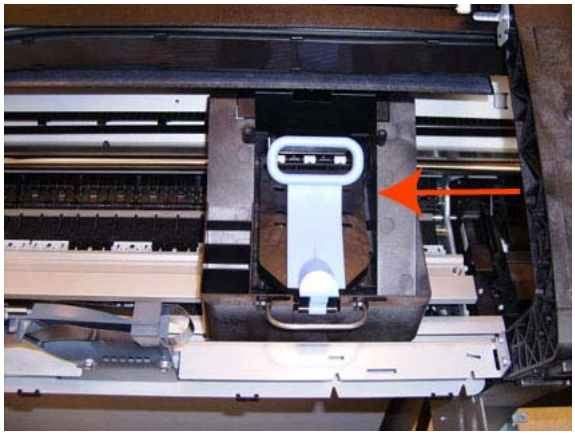

23. Loosen the T-15 screw Belt Tensioner to the printer to remove the tension from the belt.

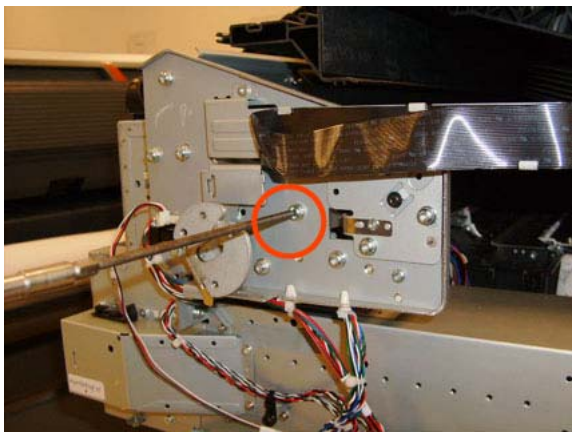

24. Leave the Belt Tensioner in place with all the tension removed.

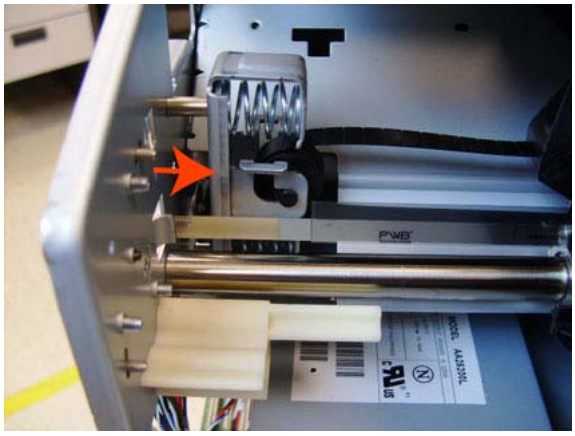

NOTE: The photo shows the 44-in printer, which has one spacer just above the red arrow. The 24-in printer has two spacers.

25. Remove the Belt Assembly from the Scan-Axis Motor drive wheel.

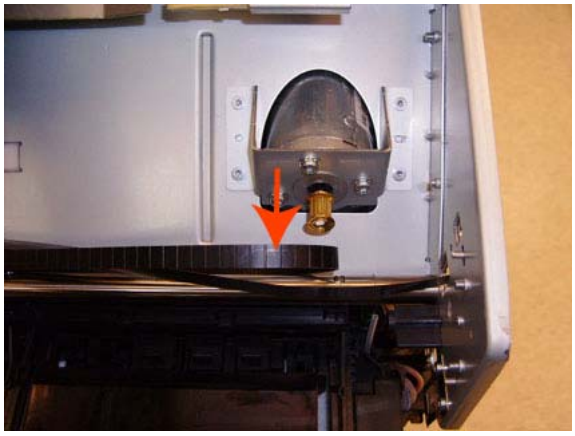

26. Remove the two T-10 screws that secure the Media Lever attachment plate.

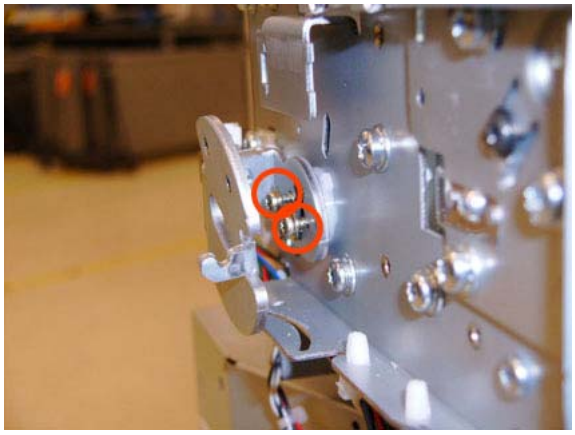

27. Remove the Media Lever attachment plate.

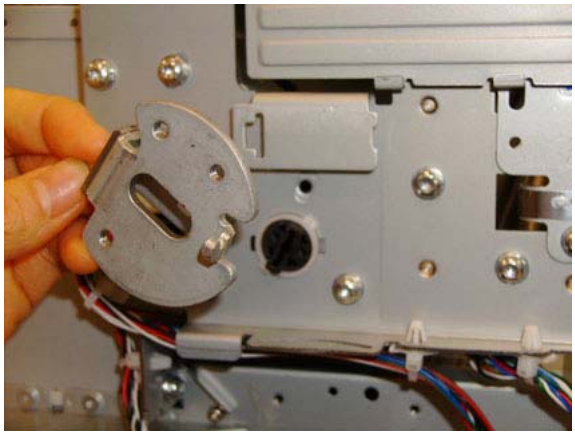

28. Disconnect the Pinchwheel Lifter Sensor, and unroute the cable.

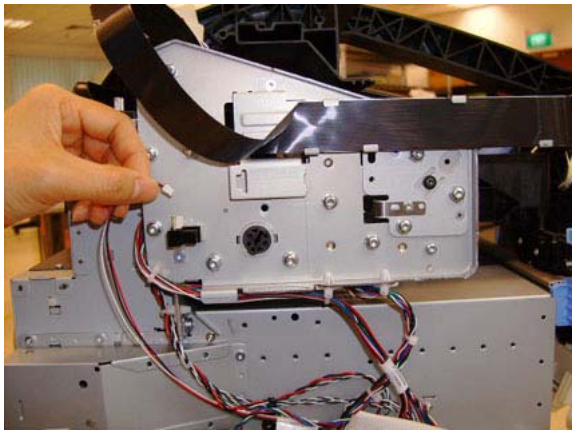

29. Unscrew the Trailing Cable support (two screws).

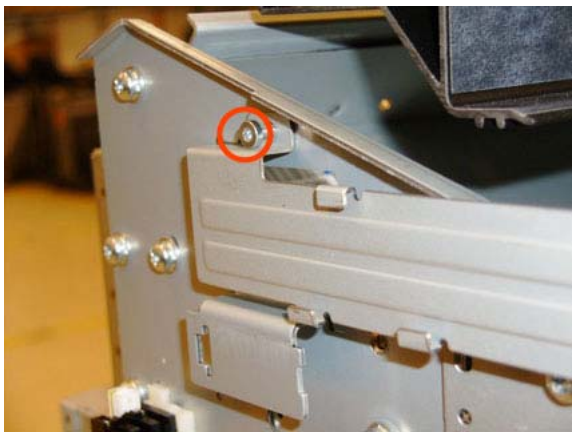

30. Remove the Trailing Cable support.

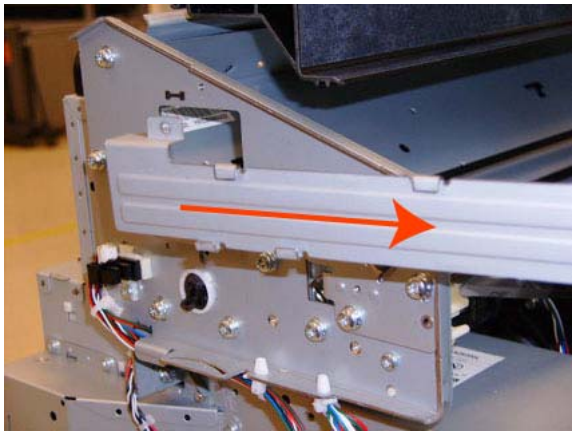

31. Remove the seven T-15 screws that secure the Scan Side Panel to the printer.

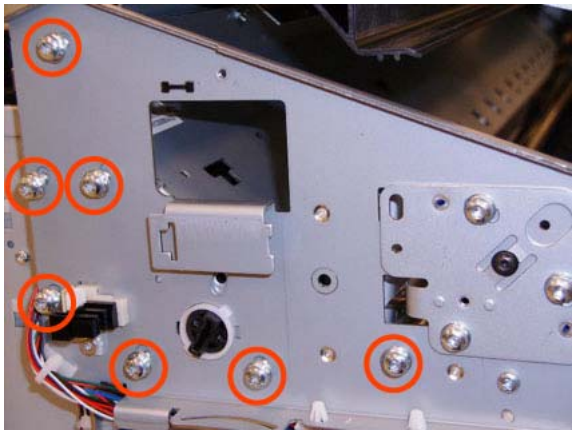

32. Remove the Scan Side Panel.

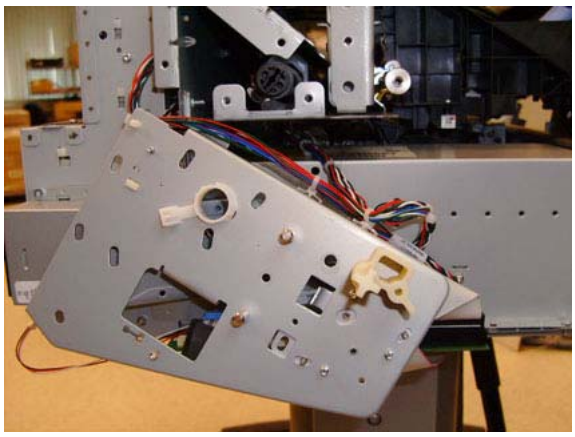

33. Carefully slide the Carriage Assembly and Belt Assembly out of the printer (and the Trailing Cable if you are removing it with the Carriage Assembly).

△ **CAUTION:** Be careful not to damage the PRS Slider.

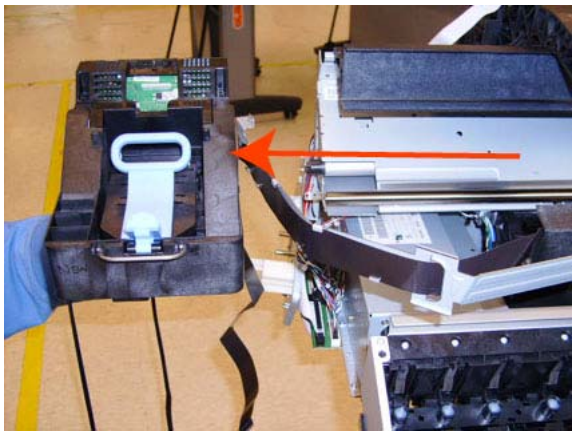

NOTE: When you reinstall the Carriage Assembly, take care not to damage the PRS Slider.

NOTE: When you finish installing or replacing this component, you must perform the necessary Service Calibrations. To find which calibrations you must perform, see Service Calibration Guide to Removal and Installation on page 184.

Carriage Bushing, Rear

Removal

1. Switch off the printer and remove the power cable.
2. Remove the Cover, Front on page 235.
3. Remove the Cover, Right on page 241.
4. Remove the Cover, Left on page 236.
5. Remove the Cutter Assembly on page 247.
6. Remove the Front Panel on page 270.
7. Remove the Cover, Top on page 244.
8. Remove the Window Position Sensor on page 398.
9. Remove the Encoder Strip, spring and attachment nut on page 263.
10. Remove the Carriage Assembly on page 169.
11. Squeeze the left hand clip of the Carriage Rear Bushing sufficiently to be able to release it from the Carriage Assembly.

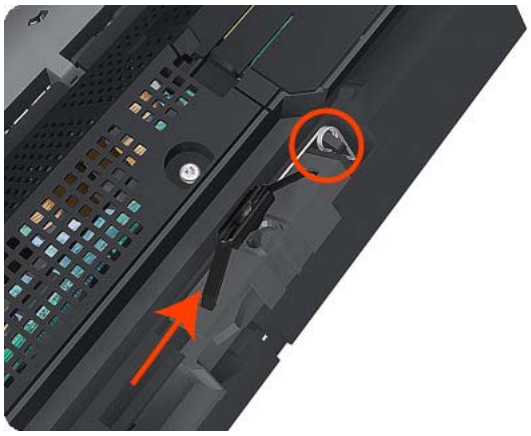

12. Rotate the Carriage Rear Bushing vertically and remove it from the Carriage Assembly.

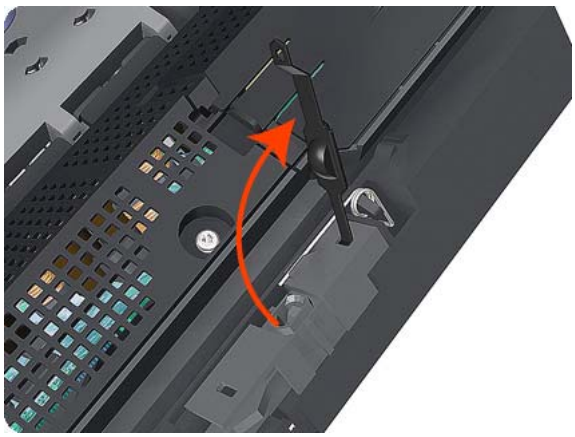

NOTE: When you reinstall the Carriage Rear Bushing, use the Oil and Oil Dispenser from the Lubrication Kit to add 2 or 3 drops of oil to the small depression in it.

NOTE: When you finish installing or replacing this component, you must perform the necessary Service Calibrations. To find which calibrations you must perform, see Service Calibration Guide to Removal and Installation on page 184.

Carriage Cover and Carriage Latch

Removal

1. Switch off the printer and remove the power cable.
2. Remove the Cover, Right on page 241.
3. Open the Carriage Cover.

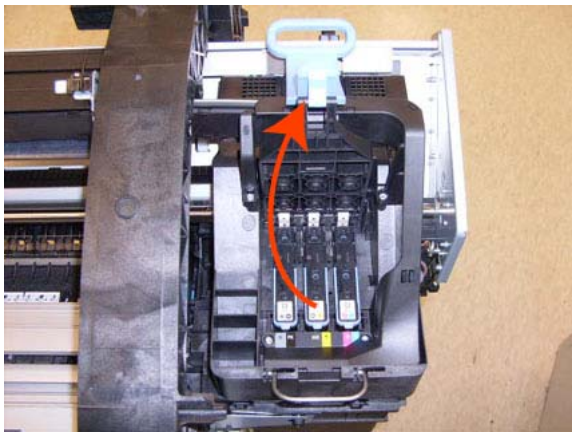

4. Remove all the Printheads.

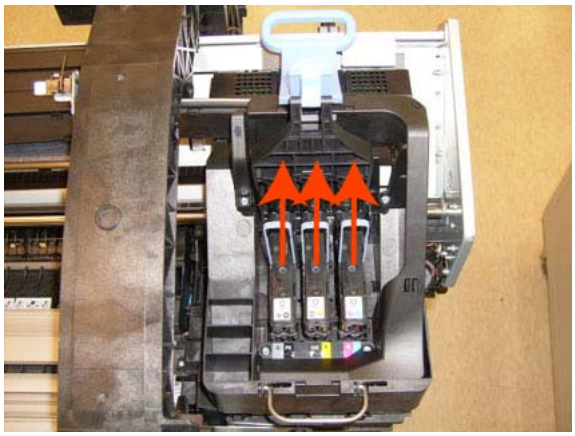

5. Unscrew the small cover of the Carriage PCA.

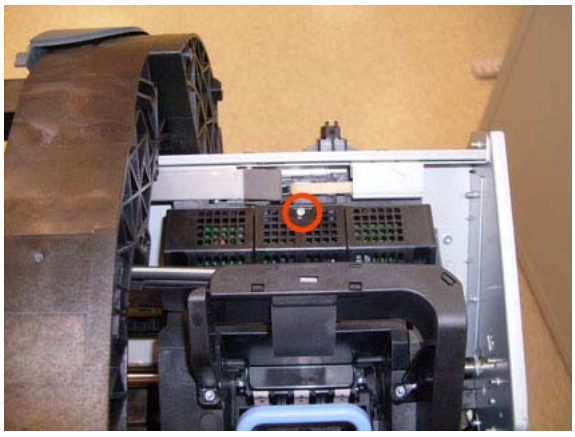

6. Remove the small cover of the Carriage PCA.

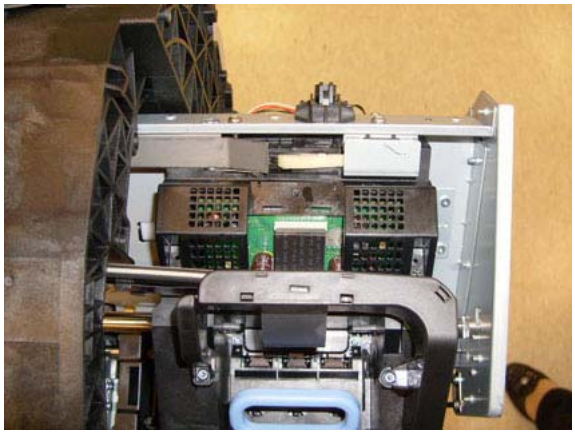

7. Disconnect the ribbon Trailing Cable from the Carriage PCA.

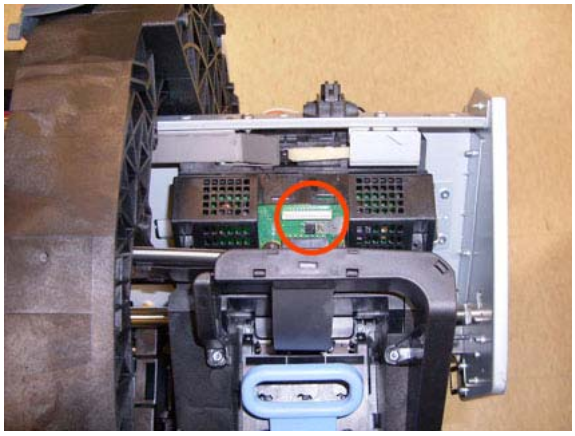

8. Remove the four T-15 screws that secure the Ink Supply Tubes to the Carriage Assembly.

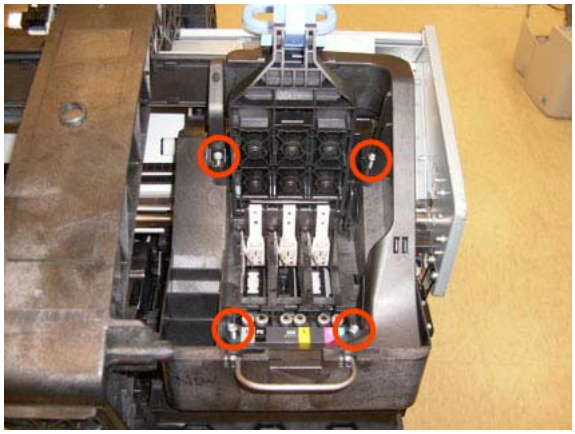

9. Carefully lift out the Ink Supply Tubes and close the carriage cover at the same time.

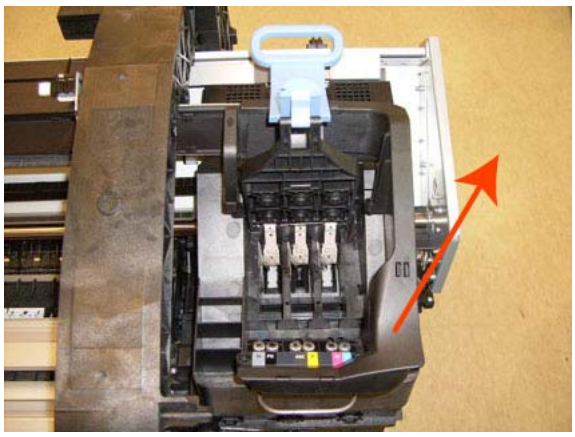

10. Close and lock the Carriage Cover.

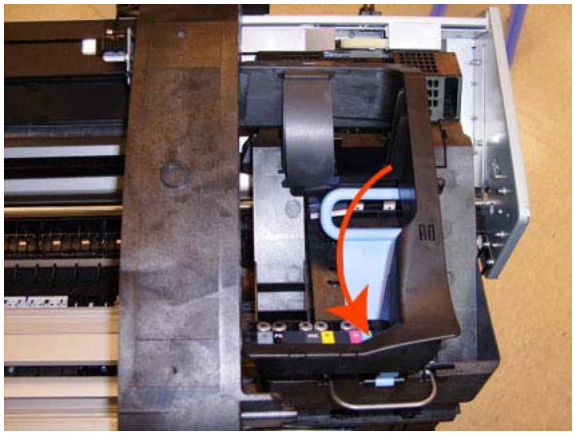

11. Carefully move the Ink Supply Tubes into the print path.

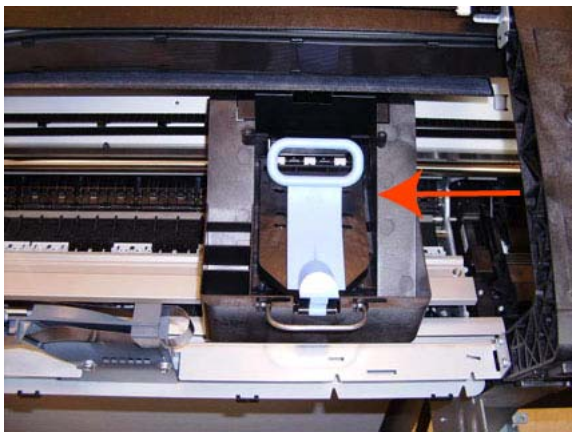

12. Remove the cover on each side of the Carriage PCA using a screwdriver to unclip it.

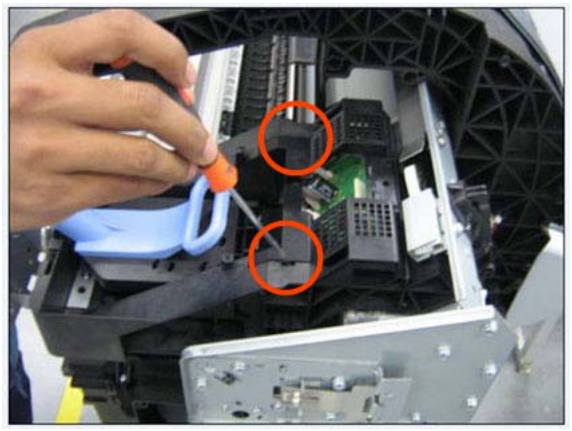

13. Disconnect the 6 ribbon cables of the Carriage Cover from the Carriage Assembly PCB.

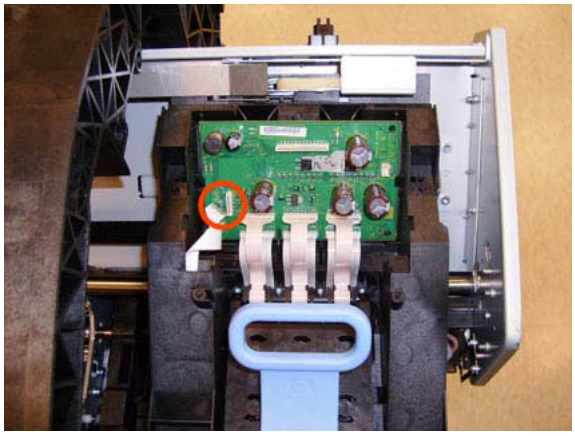

14. Remove four T-8 screws that secure the Carriage Assembly Cover hinge.

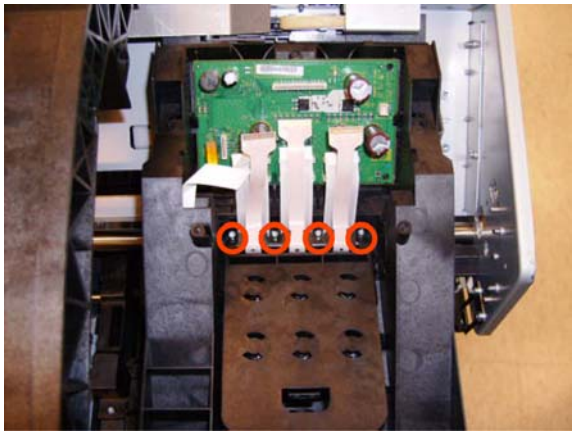

15. Carefully lift the Carriage Cover in the vertical position to remove it from the Carriage Assembly.

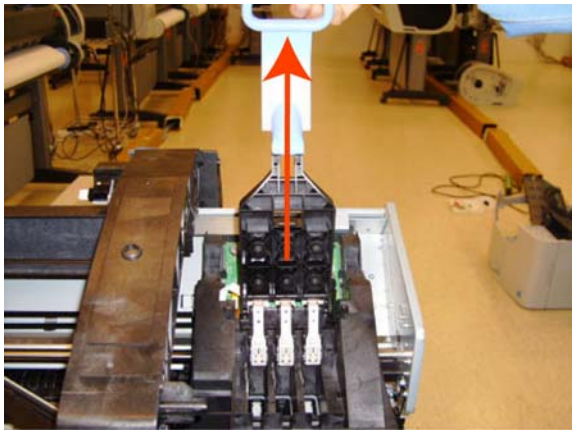

When you finish installing or replacing this component, you must perform the necessary Service Calibrations. To find which calibrations you must perform, see Service Calibration Guide to Removal and Installation on page 184.

Carriage Rail Oiler

Removal

1. Switch off the printer and remove the power cable.
2. Remove the Cover, Right on page 241.
3. Remove the T-20 Carriage Rail Oiler attachment screw.

4. Remove the Carriage Rail Oiler from the printer.

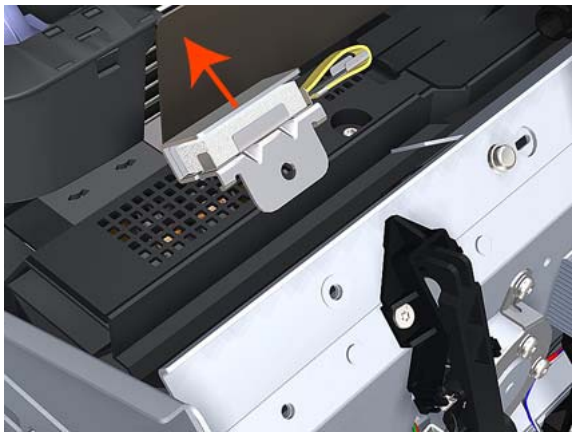

5. Add 2 or 3 drops of oil in the depression where the Slider fits.

NOTE: When you reinstall the Carriage Rail Oiler, use the Oil and Oil Dispenser from the Lubrication Kit to add 2 or 3 drops of oil to the foam of the Carriage Rail Oiler and in the small depression of the Carriage Rear Bushing.

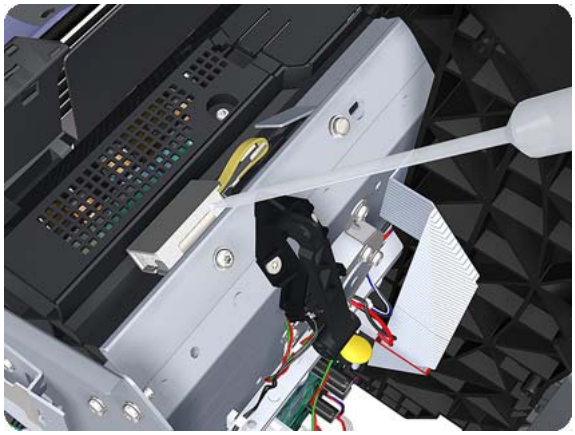

Carriage PCA

Removal

1. Switch off the printer and remove the power cable.
2. Remove the Cover, Right on page 241.
3. Open the Carriage Cover.

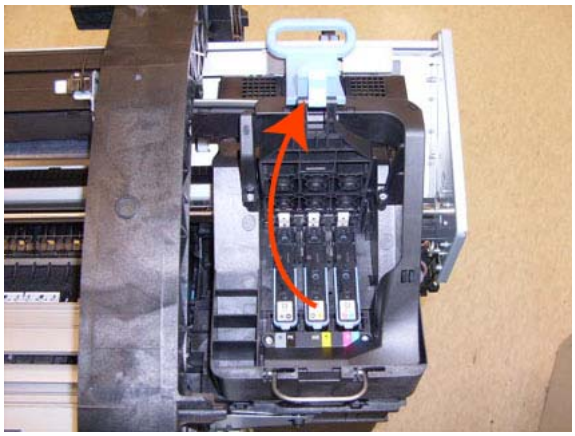

4. Remove all the Printheads.

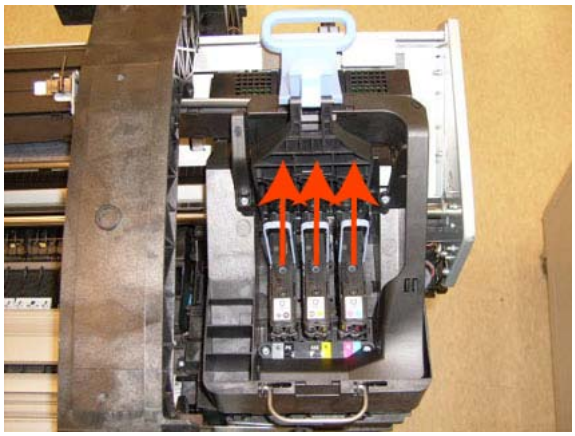

5. Unscrew the small cover of the Carriage PCA.

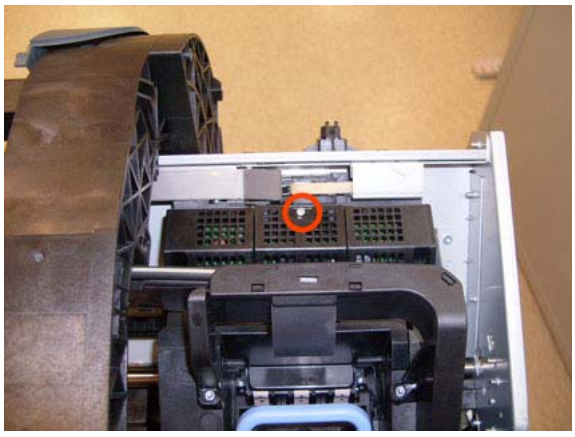

6. Remove the small cover of the Carriage PCA.

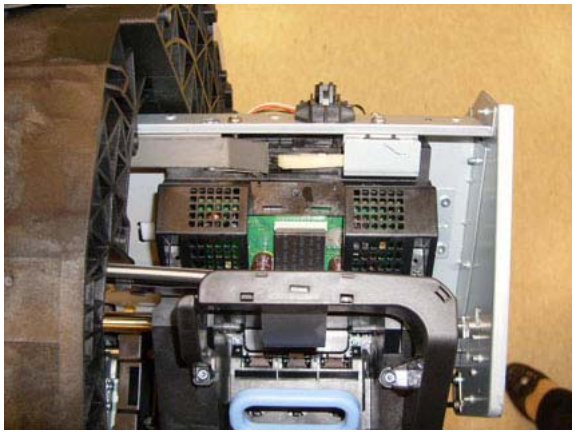

7. Disconnect the ribbon Trailing Cable from the Carriage PCA.

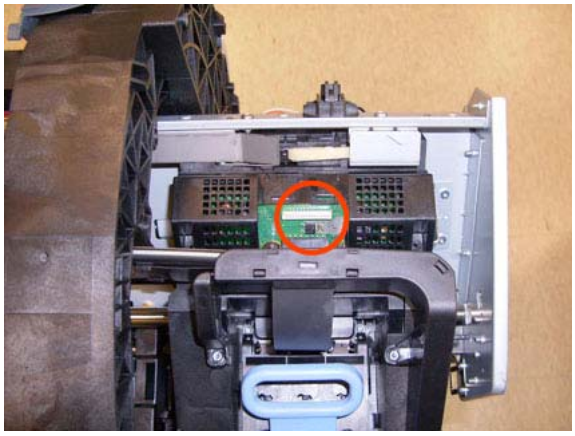

8. Remove the four T-15 screws that secure the Ink Supply Tubes to the Carriage Assembly.

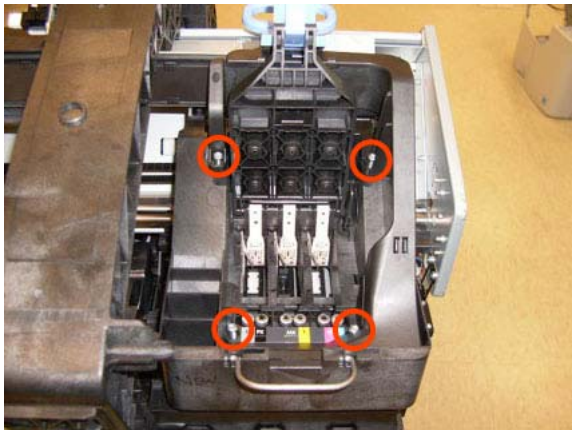

9. Carefully lift out the Ink Supply Tubes and close the carriage cover at the same time.

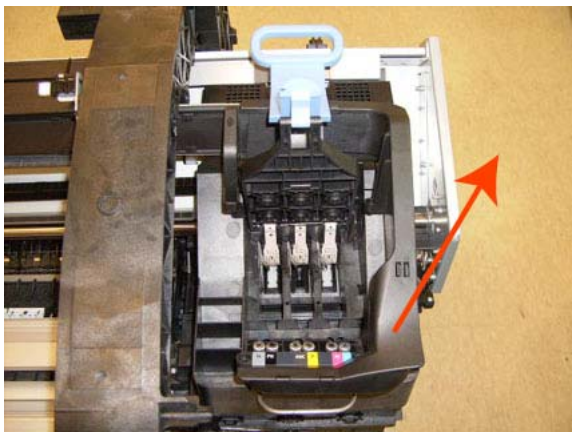

10. Close and lock the Carriage Cover.

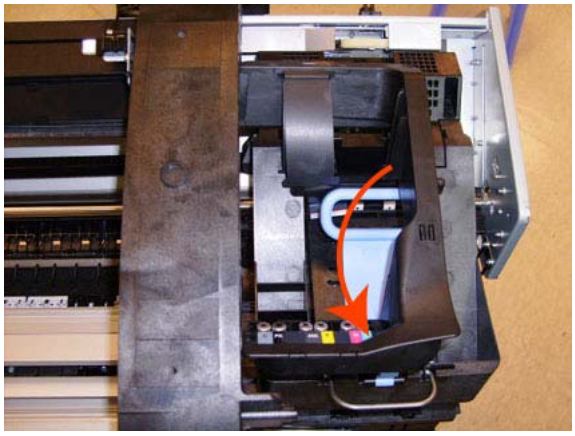

11. Carefully move the Ink Supply Tubes into the print path.

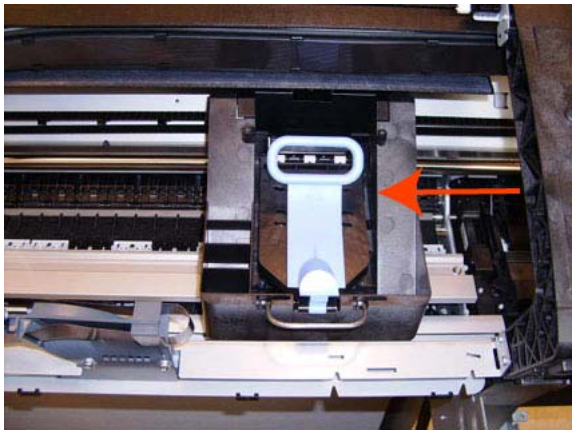

12. Remove the cover on each side of the Carriage PCA using a screwdriver unclip it.

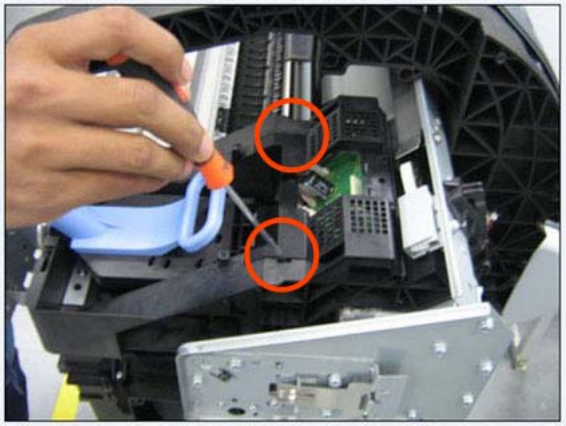

13. Disconnect all cables from the Carriage Assembly PCB.

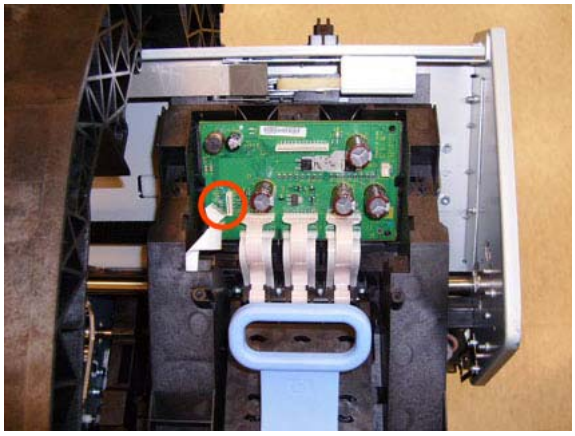

14. Press the locking clip to release the Carriage Assembly PCB from the carriage.

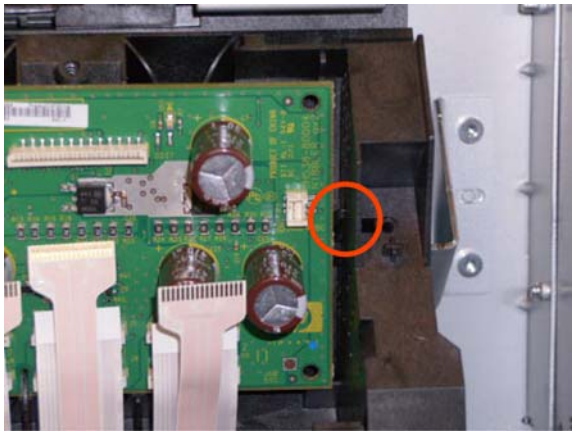

15. Remove the Carriage PCA from the carriage.

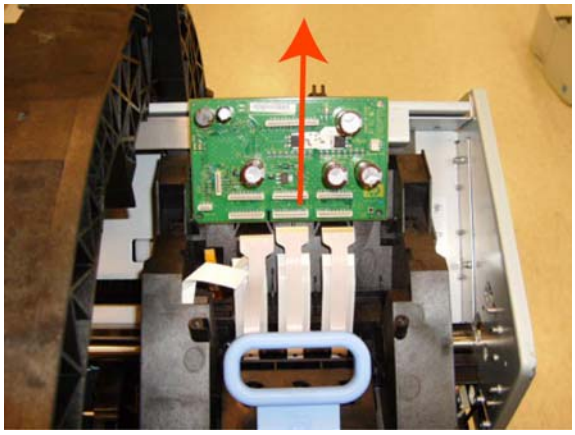

NOTE: When you finish installing or replacing this component, you must perform the necessary Service Calibrations. To find which calibrations you must perform, see Service Calibration Guide to Removal and Installation on page 184.

Cleanout

Removal

1. Switch off the printer and remove the power cable.
2. Remove the Roll Cover, Lower (T1200 only) on page 346.
3. Remove the Converger on page 233.
4. In order to avoid any damage to the paper sensor, you are recommended to introduce a sheet of A4 bond paper into the paper path, as shown, so that the paper sensor flag will be down and out of the way when you are handling the cleanout.

5. Unscrew the screws as shown.

6. First extract the right side of the cleanout, as shown, and then the left side. Be careful with the paper sensor cable.

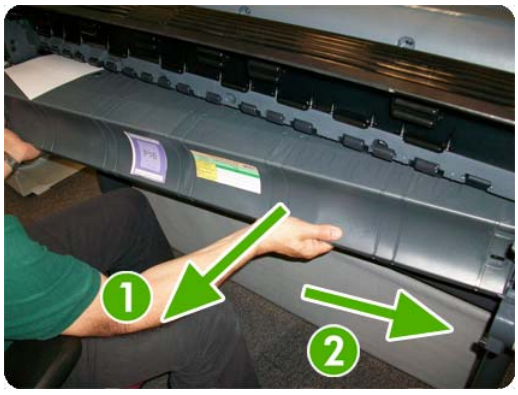

7. Disconnect the paper sensor cable connector.

Converger

Switch off the printer and remove the power cable.

Removal

1. Open the upper roll cover and rewind the upper roll.
2. Remove the upper roll and spindle.

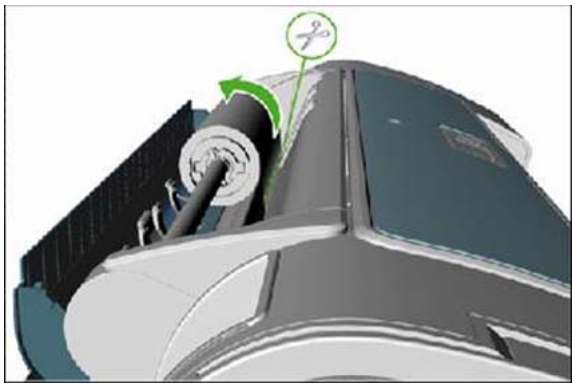

3. Rewind and remove the lower roll in the same way.
4. Remove the screw on the left side of the converger at the rear of the printer.

5. Move the converger slightly in the direction of the arrow.

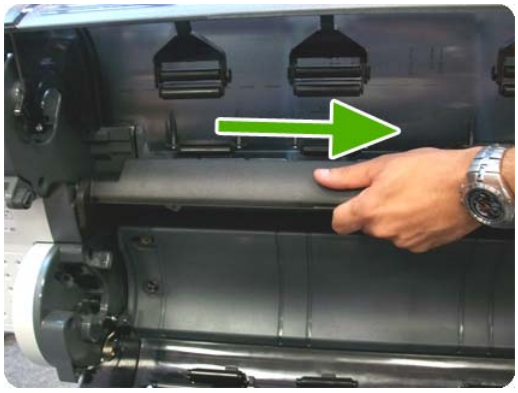

6. Move the right side of the converger in the direction of the arrow, then remove the whole converger from the printer.

Installation

1. Replace the converger by inserting the right end into position first, and then pushing the handle into place.

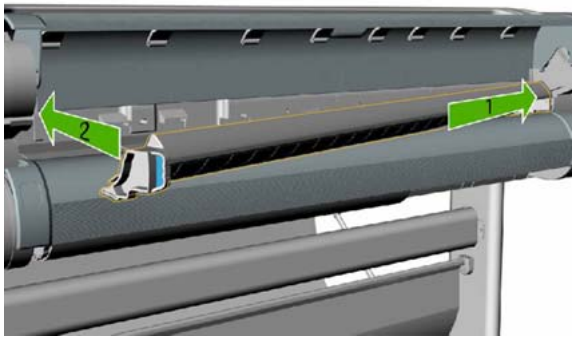

2. Replace the screw.
3. Replace and reload the rolls of paper.
4. Close the covers.

Cover, Front

Removal

1. Switch off the printer and remove the power cable.
2. Squeeze each of the four attachment clips under the Front Cover, to release the cover from the printer.

3. Carefully pull the bottom of the Front Cover forwards until you can release it from its attachments.

4. Unhook the Front Cover from the four attachments and remove it from the printer.

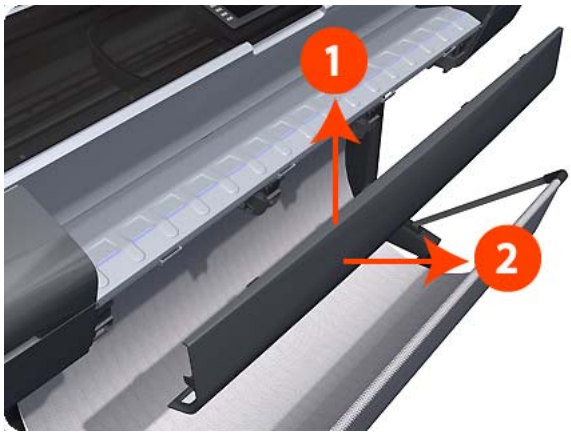

Cover, Left

Removal

1. Switch off the printer and remove the power cable.
2. Remove the Cover, Front on page 235.
3. Remove the Converger on page 233.
4. Remove the Panel, Left on page 318.
5. Unclip the spring from the attachment points on the Media Lever and Left Cover.Cover).

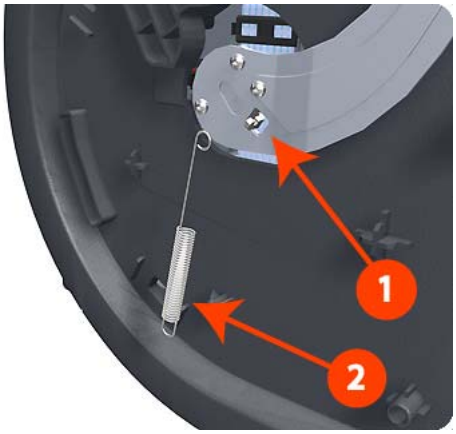

6. Remove three T-20 screws that secure the Media Lever.

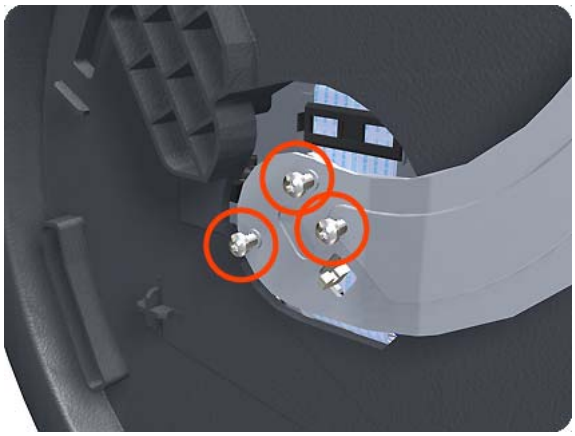

7. Use a flat-bladed screwdriver to unclip the two attachment clips of the Formatter Housing.

8. Lift the Formatter Housing out of the printer.

9. Remove one T-15 screw that secures the Left Cover (top rear, accessible under the Formatter Housing).

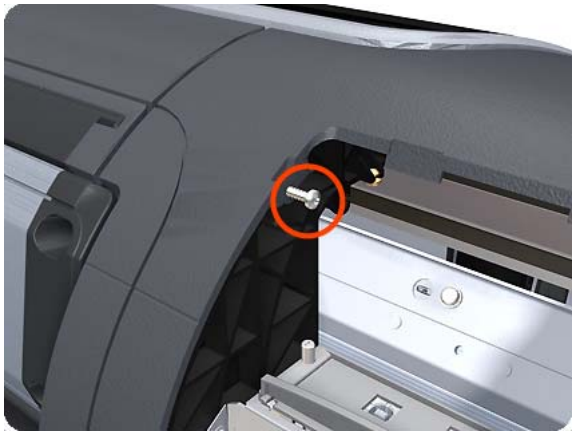

10. Remove one T-15 screw that secures the Left Cover (bottom rear).

11. Remove one T-15 screw that secures the Left Cover (bottom rear).

12. Remove one T-15 screw that secures the Left Cover (bottom front, accessible under Front Cover).

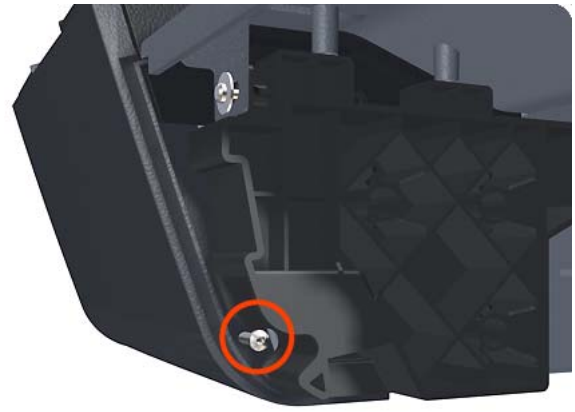

13. Remove one T-15 screw that secures the Left Cover (top front, accessible Ink Cartridge Door).

14. Unclip the Left Trim.

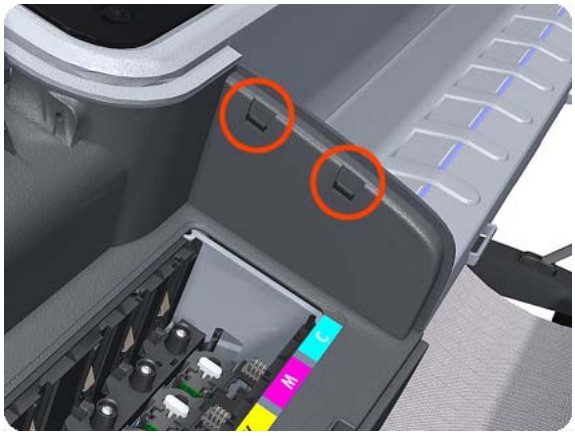

15. Remove the Left Cover from the printer.

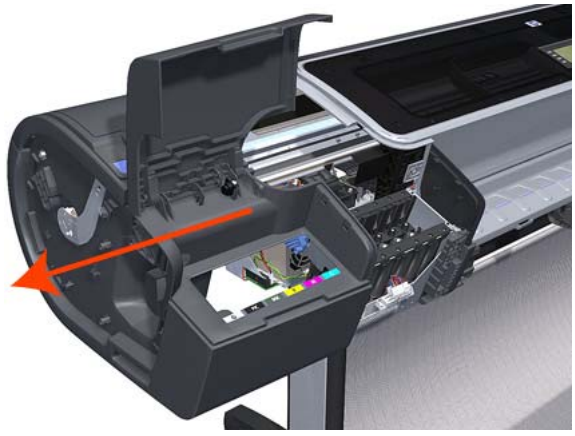

Cover, Rear

Removal

1. Switch off the printer and remove the power cable.
2. Remove the Roll Cover, Upper on page 350.
3. Remove the Converger on page 233.
4. Remove the six T-15 and four T-20 screws that secure the Rear Cover to the printer.

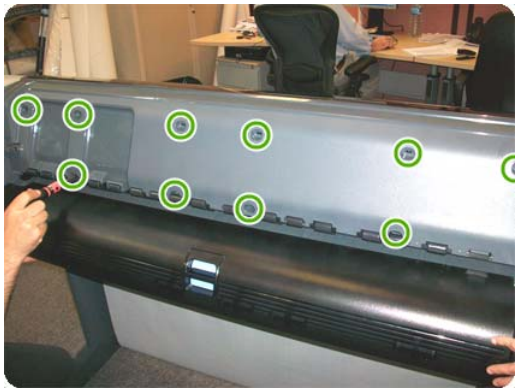

5. Remove the Rear Cover from the printer.

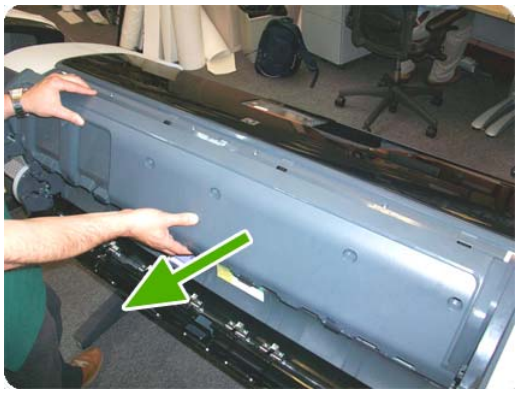

Cover, Right

Removal

1. Switch off the printer and remove the power cable.
2. Remove the Cover, Front on page 235.
3. Remove the Converger on page 233.
4. Open the Right Ink Cartridge Door by applying **sharp pressure** to the right side of the door and lifting **firmly** where the door meets the Right Cover. Use your hands. When the door is unclipped from the pressure applied to the right side of the door, you will hear a sound that corresponds to the clip.

NOTE: Do **not** use a screwdriver or other tool to open the Right Ink Cartridge Door.

5. Remove one T-15 screw that secures the Right Cover to the printer (at the rear of the printer).

6. Remove one T-15 screw that secures the Right Cover to the printer (at the rear of the printer).

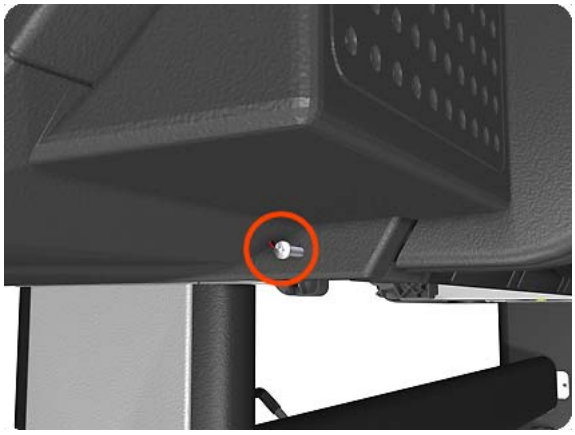

7. Remove one T-15 screw that secures the Right Cover to the printer (at the rear of the printer).

8. Remove one T-15 screw that secures the Right Cover to the printer (accessible under the Front Cover).

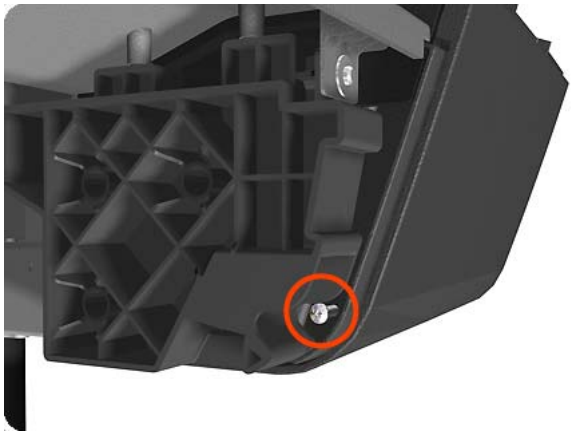

9. Remove one T-15 screw that secures the Right Cover to the printer.

10. Unclip the Right Trim.

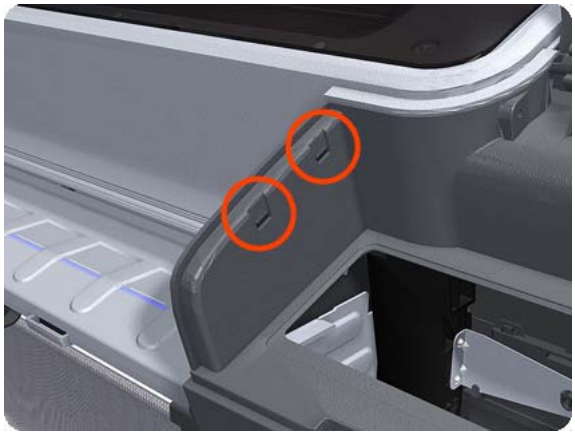

11. Remove the Right Cover from the printer.

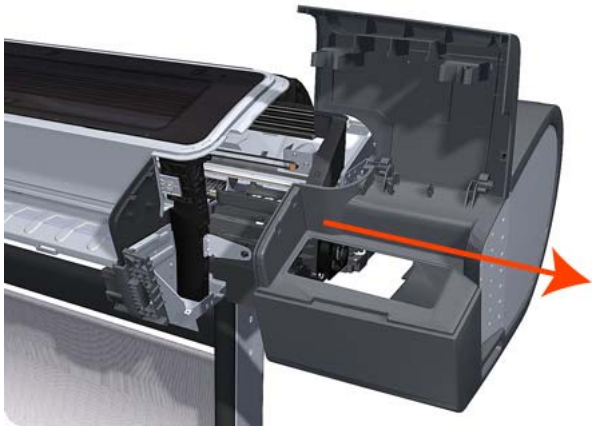

Cover, Top

Removal

1. Switch off the printer and remove the power cable.
2. Remove the Window on page 394.
3. Remove the Cover, Right on page 241.
4. Remove the Cover, Left on page 236.
5. Remove the Cover, Rear on page 240.
6. Remove the Front Panel on page 270.
7. Remove the four T-15 top screws that secure the Top Cover to the printer.

8. Remove the front T-15 screw that secures the front left side of the Top Cover to the printer.

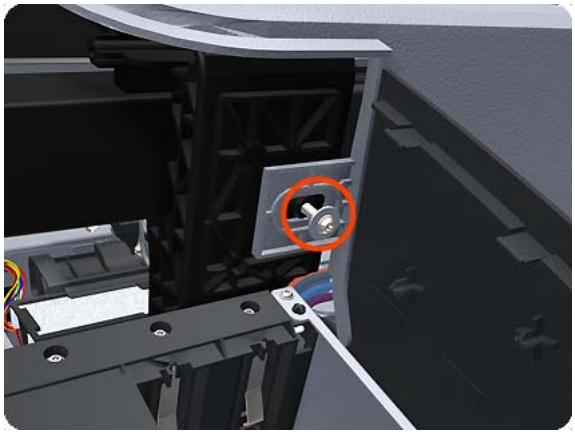

9. Carefully pull the attachment clip forward until you can lift the bottom left corner of the Top Cover approximately 10 mm.

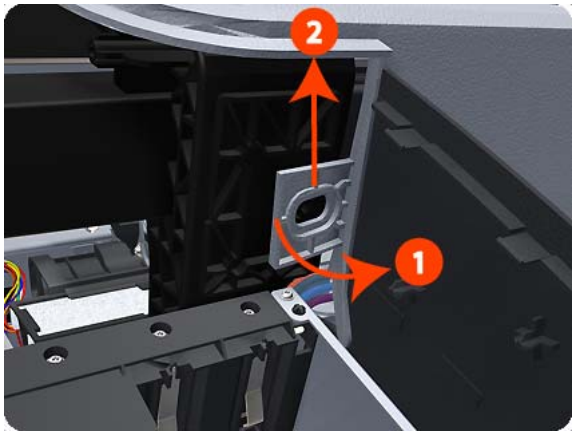

10. Remove the front T-15 screw that secures the front left side of the Top Cover to the printer.

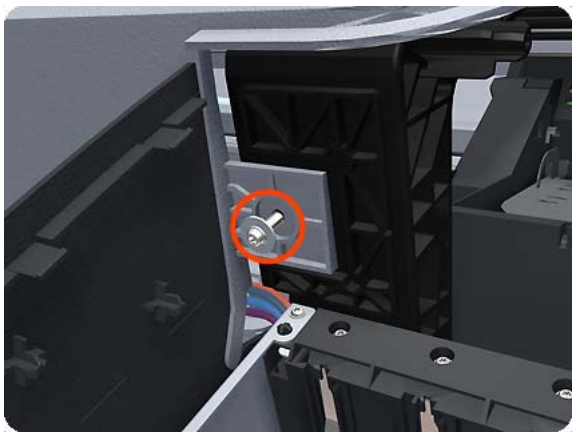

11. Carefully pull the attachment clip forward until you can lift the bottom left corner of the Top Cover approximately 10 mm.

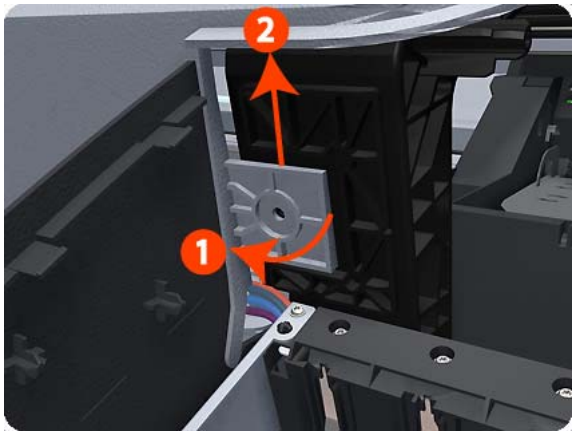

12. Lift the Top Cover of the printer sufficiently to gain access to the Front Panel ribbon cable.

13. Unroute the Front Panel ribbon cable from the two cable clamps on the bottom surface of the Top Cover.

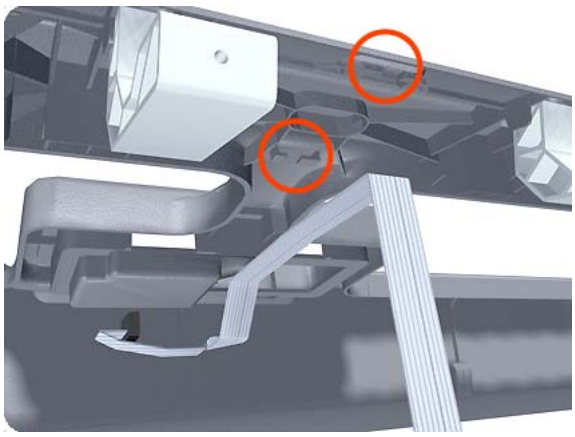

14. Lift the Top Cover off the printer.

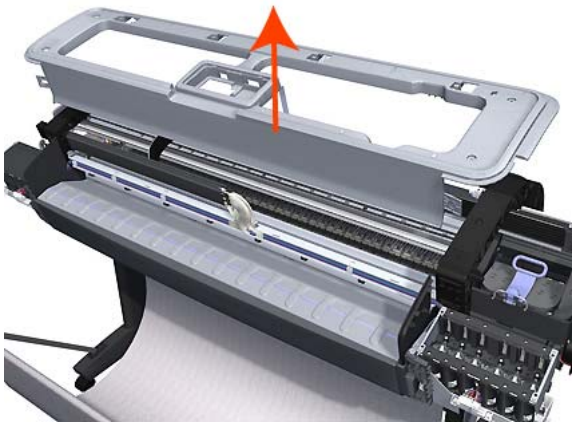

Cutter Assembly

This part can be replaced by customers who have the appropriate flier.

Removal and installation

1. At the front panel, select the Ink menu and then **Replace printheads**. The Carriage Assembly moves to the left and stops in the correct position to remove the printheads.

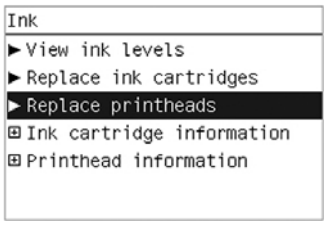

2. Turn off the printer, using the **Power** key on the front panel and then the power switch at the rear.

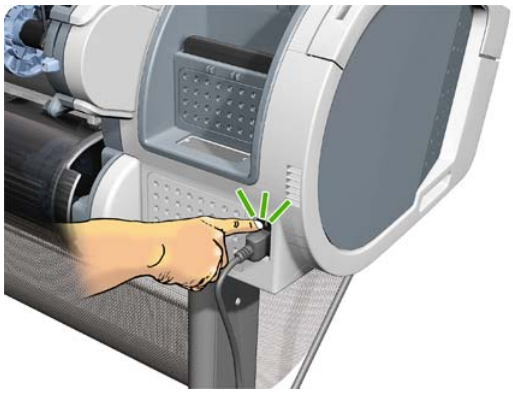

3. Open the window.

4. Locate the cutter on the right, beside the printhead carriage.

5. Unscrew the cutter.

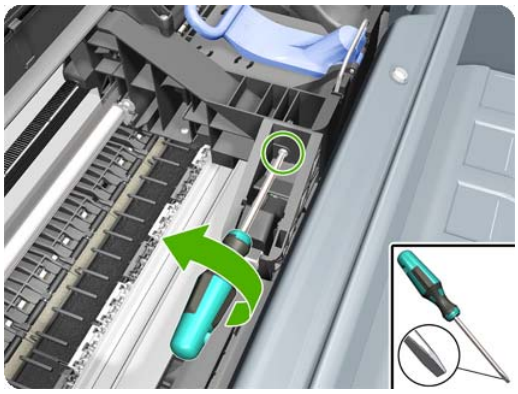

6. Move the cutter left and then up.

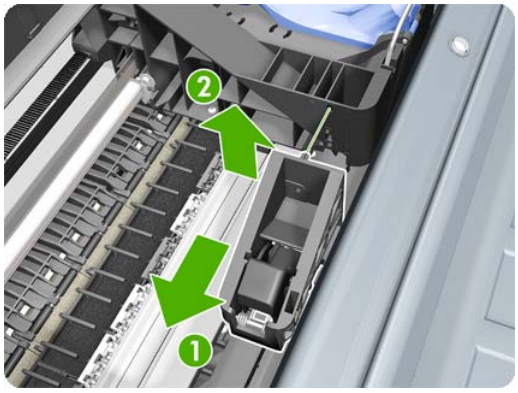

7. Check that the lever on the side of the new cutter is horizontal as shown.

8. Introduce the new cutter into its correct position.

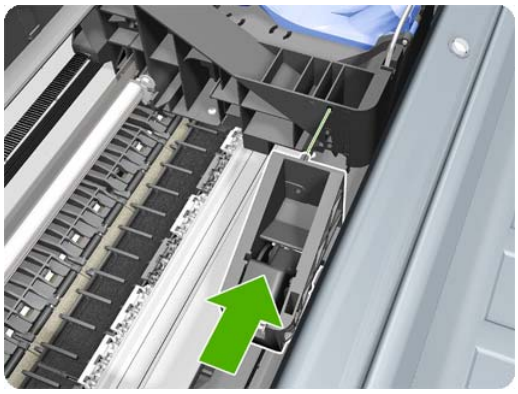

9. Screw the cutter into place.

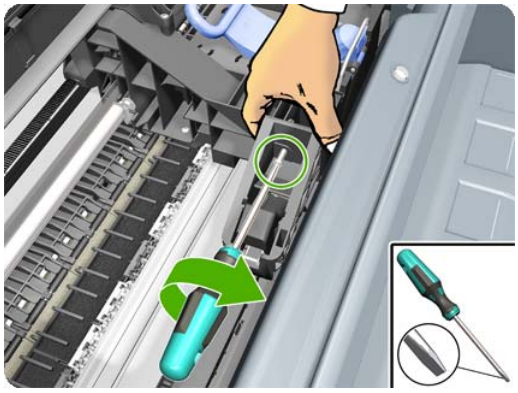

10. Close the window.

11. Turn the printer back on.

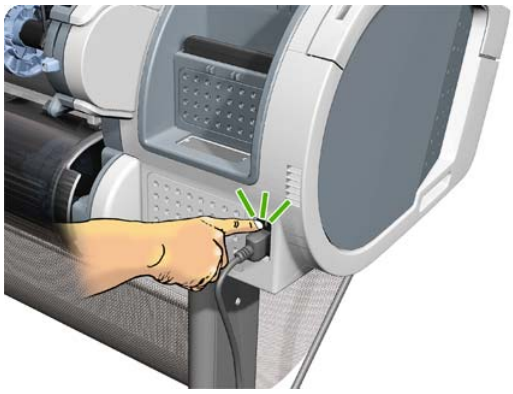

Drop Detector

Removal

1. Switch off the printer and remove the power cable.
2. Remove the Cover, Right on page 241.
3. Remove the Service Station on page 367.
4. Unroute the Drop Detector ribbon cable from the Service Station cable clamps.

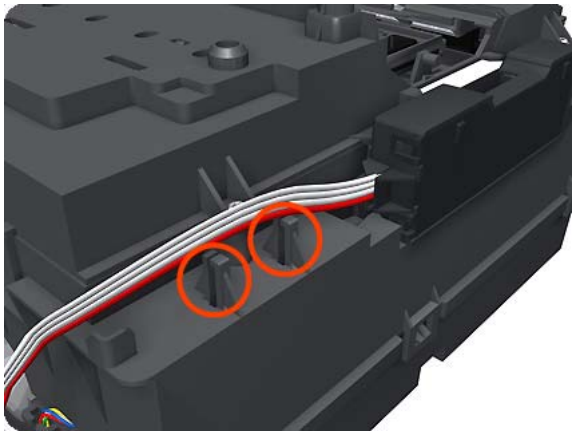

5. Remove the T-10 screw that secures the Drop Detector to the Service Station.

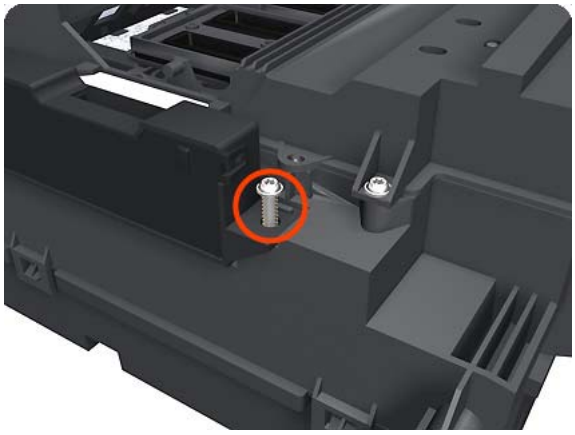

6. Lift the Drop Detector off the Service Station.

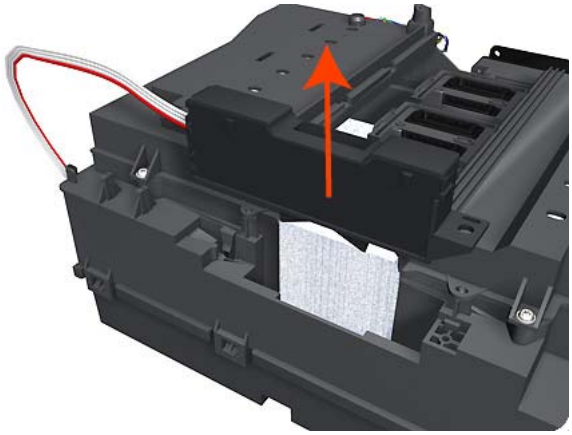

NOTE: When you finish installing or replacing this component, you must perform the necessary Service Calibrations. To find which calibrations you must perform, see Service Calibration Guide to Removal and Installation on page 184.

EE Box

Removal

1. Remove the Cover, Left on page 236.

2. Remove all connectors from the Wukong.

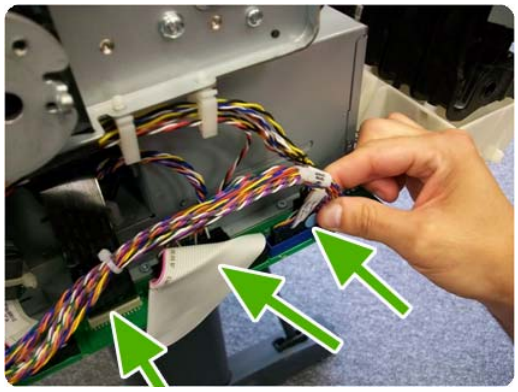

3. Unclip the cables from the cable ties.

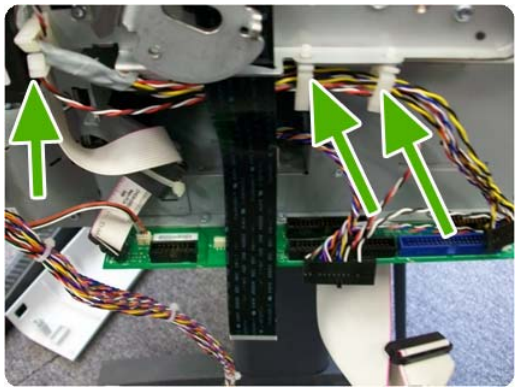

4. Remove ferrite from the FP cable without cutting the cable tie.

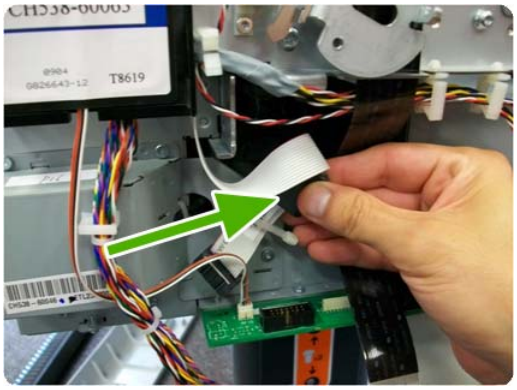

5. Unclip the cables from the cable ties.

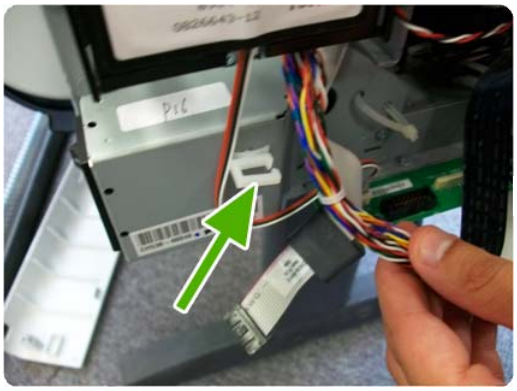

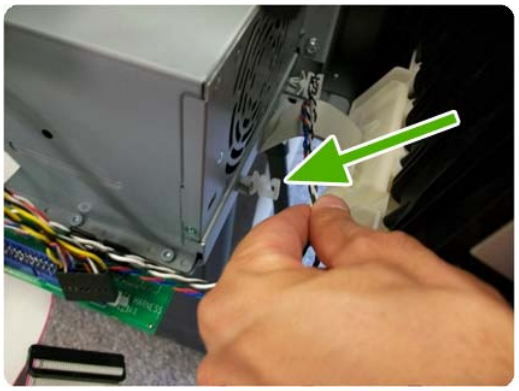

6. Unscrew the screws as shown.

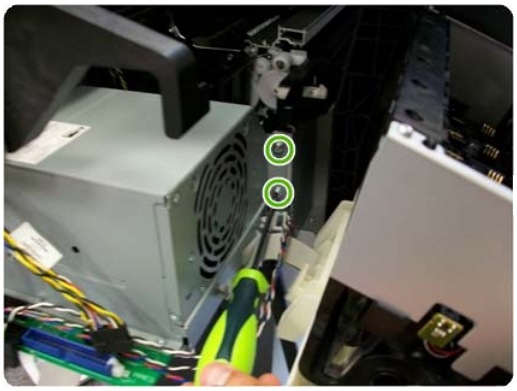

7. Remove the RFID support.

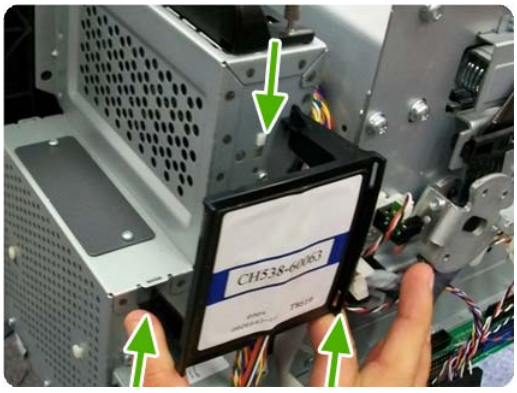

8. Unscrew the screws as shown.

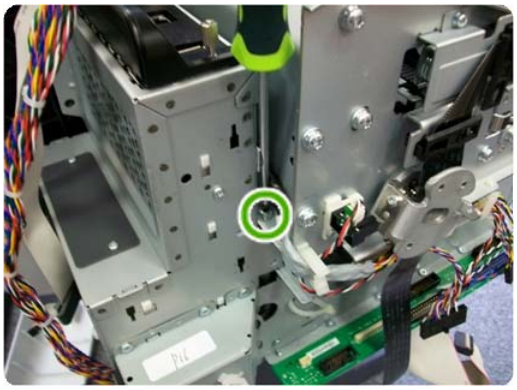

9. Unclip the ISS cable from the cable ties.

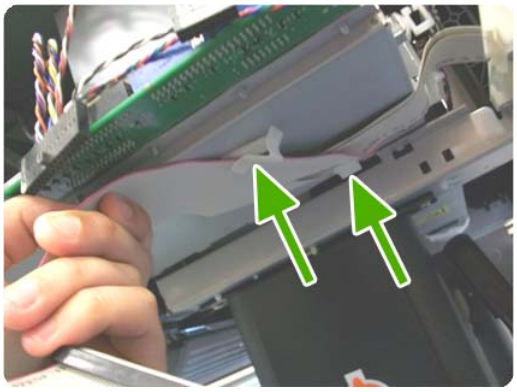

10. Unclip more cables from the cable ties.

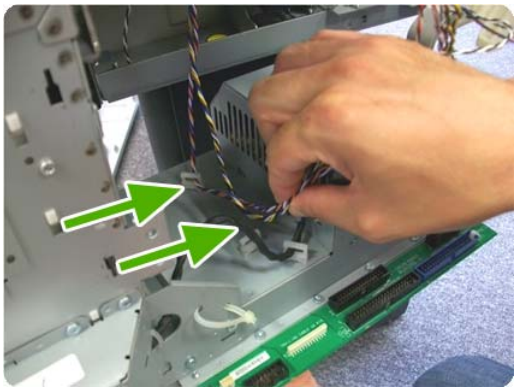

11. Remove the EE box from the printer.

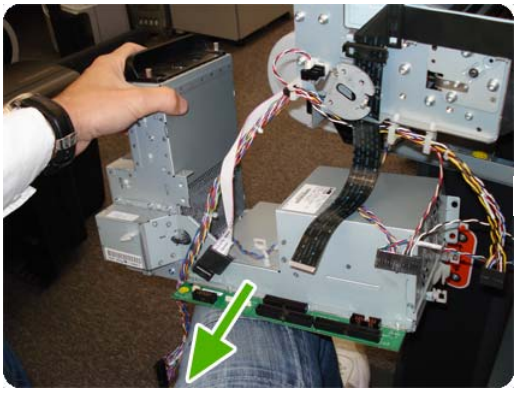

Electronics Module Main PCA and PSU

Removal

1. Switch off the printer and remove the power cable.
2. Remove the Cover, Left on page 236.
3. Disconnect all the connectors on the Electronics Module. The ferrite on the left will be located under the board, so take care.

NOTE: The two parallel connectors, white (A) and black (B), on the right of the board, cannot be connected backwards or swapped.

The harness cable (A) connects to the white connector. The flat cable (B) connects to the black connector.

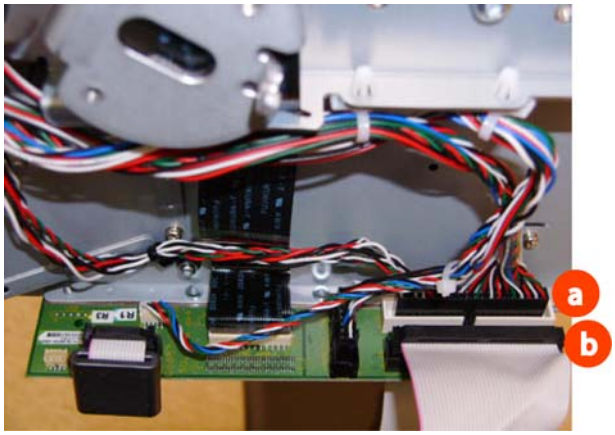

4. Unroute all the cables disconnected in the previous step.

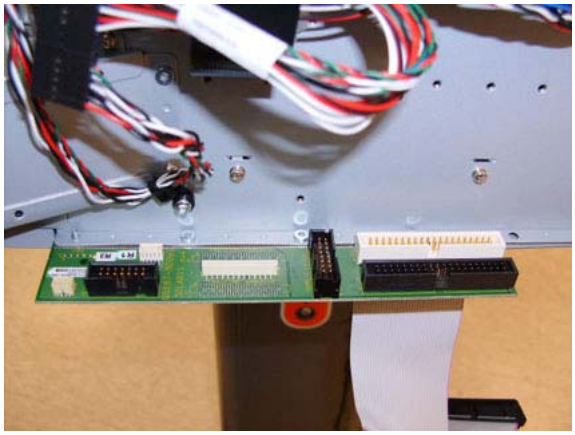

5. Remove two T-20 screws that secure the Electronics Module to the printer.

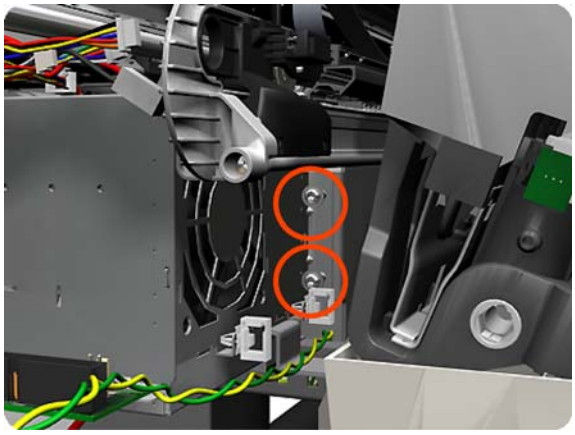

6. Remove one T-15 screw that secures the Electronics Module to the printer.

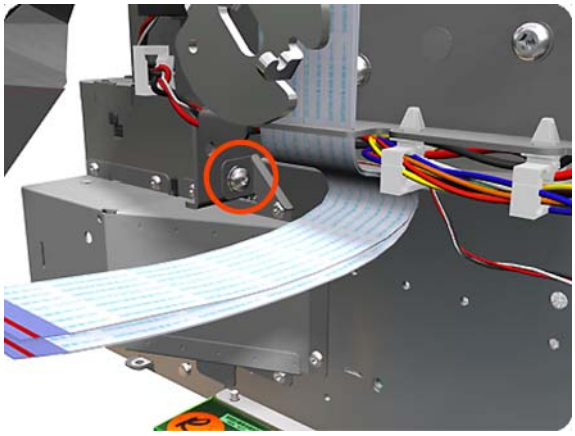

7. Remove one T-20 screw that secures the Electronics Module to the printer.

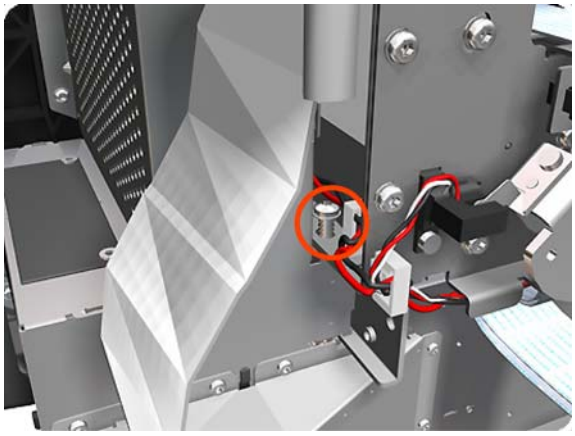

8. Remove two T-20 screws that secure the Electronics Module to the printer.

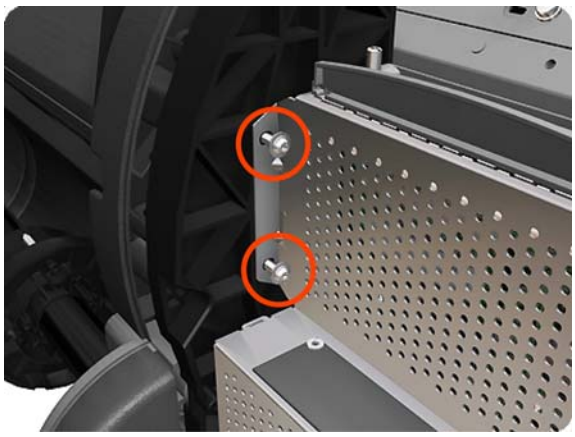

9. Remove one T-20 screw that secures the Electronics Module to the printer.

10. Carefully lift the Electronics Module out of the printer.

NOTE: When you install the Electronics Module, make sure it is correctly aligned with the mounting rail.

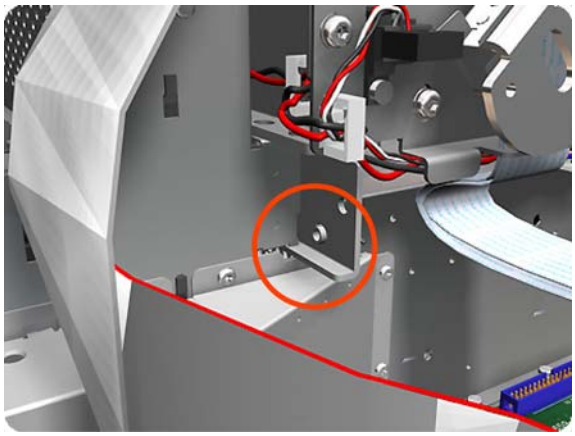

NOTE: When you finish installing or replacing this component, you must perform the necessary Service Calibrations. To find which calibrations you must perform, see Service Calibration Guide to Removal and Installation on page 184.

Encoder Disk and Encoder Sensor

NOTE: Never install a previously used Encoder Sensor PCA. This can cause serious problems, and may make the printer unusable.

Removal

1. Switch off the printer and remove the power cable.
2. Remove the Cover, Left on page 236.
3. Remove the Electronics Module Main PCA and PSU on page 256.
4. Remove the Spittoon, Left on page 374.
5. Remove the Encoder Disk from the Media Advance Roller spindle, and lift it straight out of the printer.

   NOTE: The Media Advance Roller spindle is delicate. Remove the Encoder Disk gently.

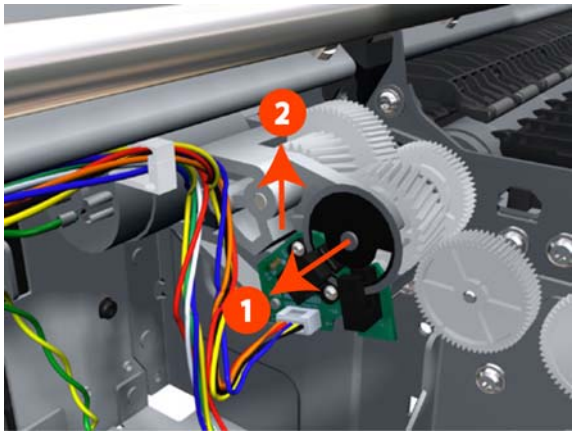

6. Disconnect the two Encoder Sensor connectors.

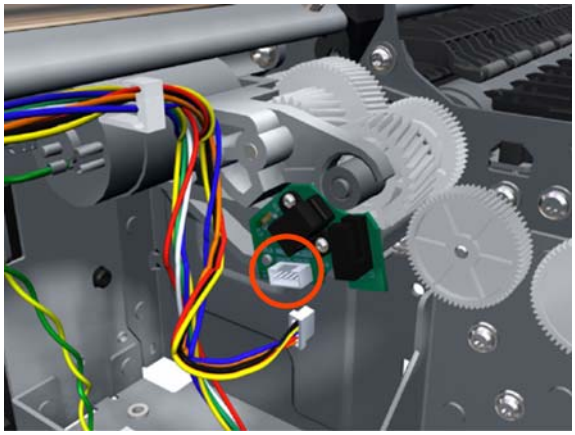

7. Remove two T-6 screws that secure the Encoder Sensor to the Media Advance Drive.

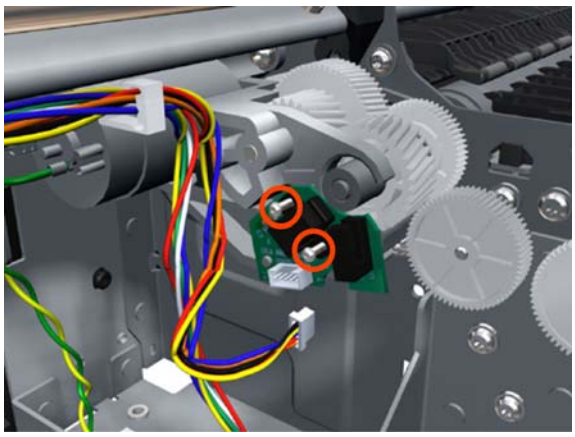

8. Remove the Encoder Sensor PCA from the printer.

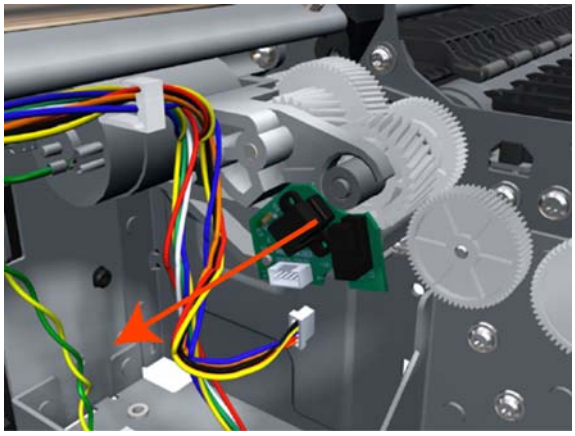

Encoder Strip

For information about the Encoder Strip service parts, see Scan-Axis Assemblies on page 170.

Removal

1. Switch off the printer and remove the power cable.
2. Remove the Cover, Right on page 241.
3. Remove the Cover, Left on page 236.
4. Remove the Encoder Strip, spring and attachment nut on page 263.
5. Use the spanner provided in the tool kit to remove the 13 mm locking nut that secures the Encoder Strip to the Encoder Strip Spring.

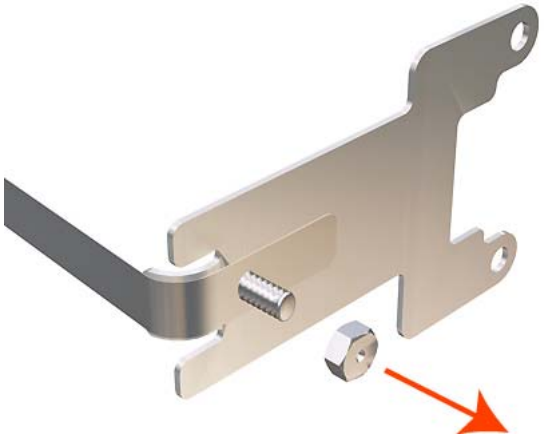

6. Remove the Encoder Strip Spring.

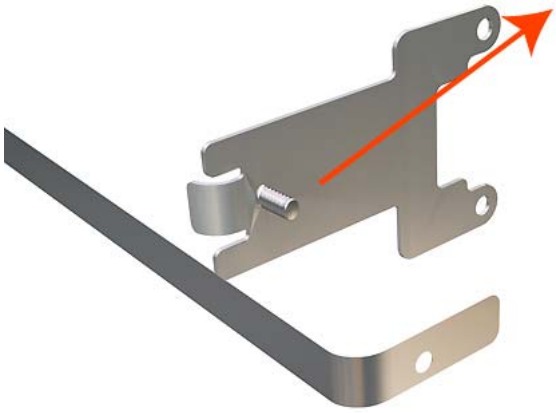

NOTE: When you finish installing or replacing this component, you must perform the necessary Service Calibrations. To find which calibrations you must perform, see Service Calibration Guide to Removal and Installation on page 184.

Encoder Strip, spring and attachment nut

Removal

1. Switch off the printer and remove the power cable.
2. Remove the Cover, Right on page 241.
3. Remove the Cover, Left on page 236.
4. Remove the T-10 screw that secures Encoder Strip to the printer.

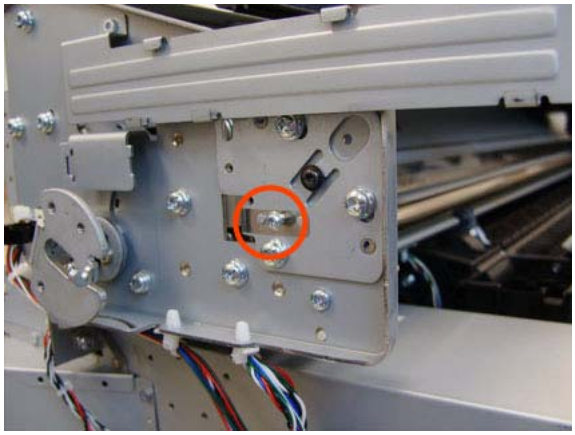

5. Grip the Encoder Strip and move it towards the left to take off the tension until you have completed the next step.

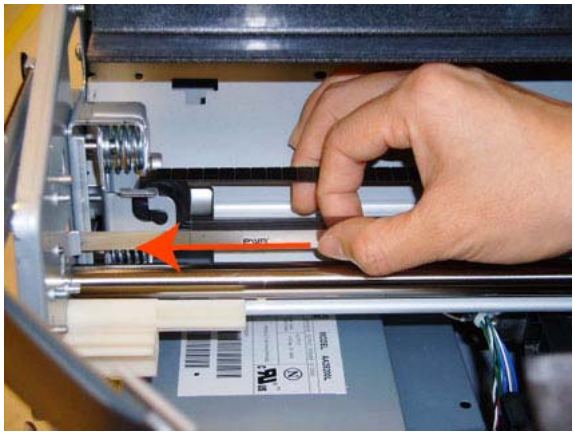

6. Unclip the Encoder Strip from its attachment lugs.

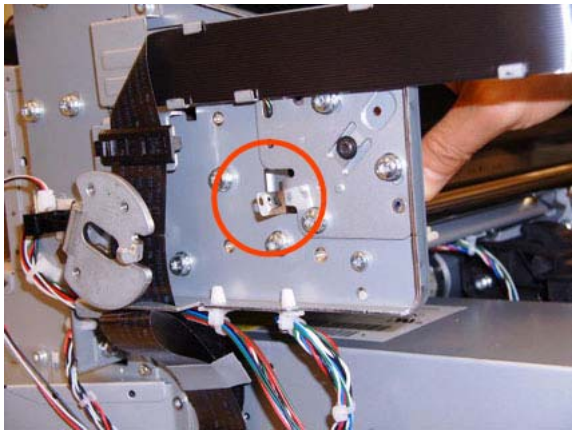

7. Loosen the T-10 uncapping screw sufficiently so you can manually move the Carriage Assembly in step 7.

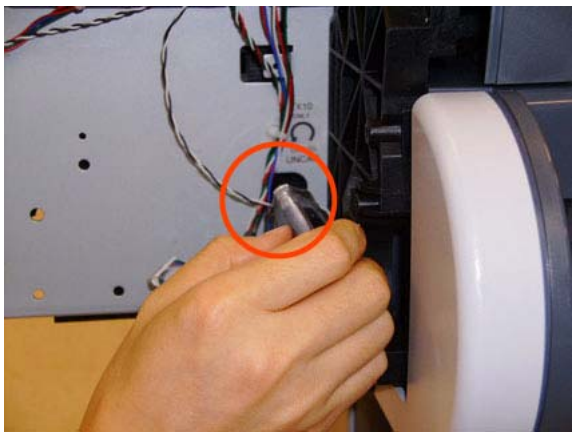

8. Push the Carriage Assembly into the print path.

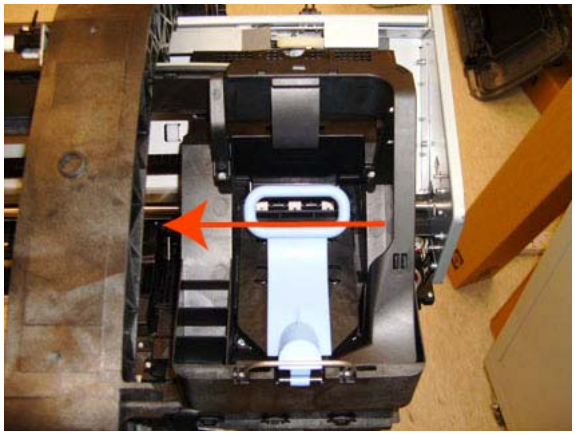

9. Unclip the Encoder Strip tensioner from the right hand end and pull the encoder strip straight out.

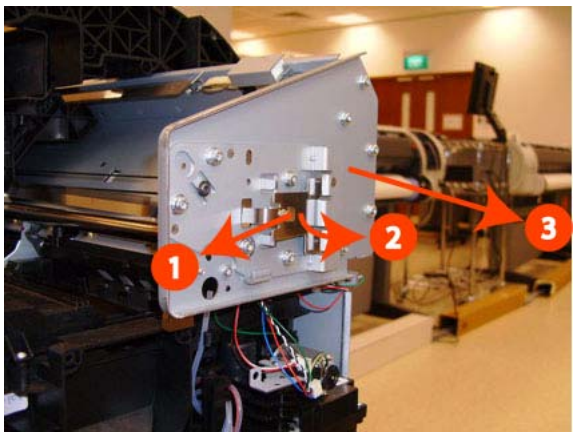

NOTE: When you finish installing or replacing this component, you must perform the necessary Service Calibrations. To find which calibrations you must perform, see Service Calibration Guide to Removal and Installation on page 184.

Formatter

Removal

1. Turn off the printer and remove the power cable.
2. Fully loosen the two locking thumbscrews that secure the Formatter in the printer.

3. Lift the Formatter out of the printer.

Installation

1. When you install a new Formatter, follow the instructions provided on the flier that accompanies it to set up the printer.
2. If you try to install a Hard Disk Drive that was previously used in a different printer, the printer displays a System Error and will not start successfully. See Hard Disk Drive on page 278.

Freewheel Assembly

These parts can be replaced by customers who have the appropriate flier.

Removal and installation

1. Open the roll cover.

2. Unscrew the freewheel assembly.

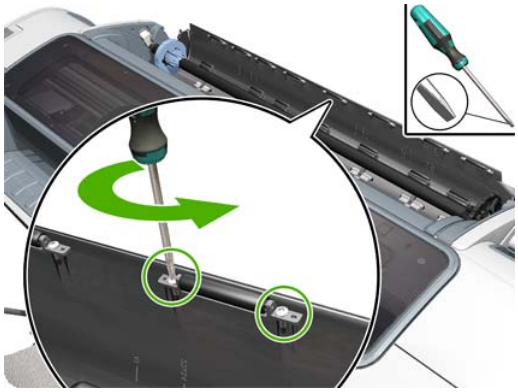

3. Remove the freewheel assembly.

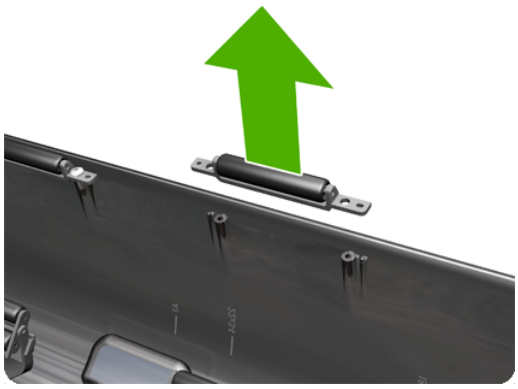

4. Locate the new freewheel assembly and screws.

5. Fit the freewheel assembly to the roll cover.

6. Screw the freewheel assembly to the roll cover.

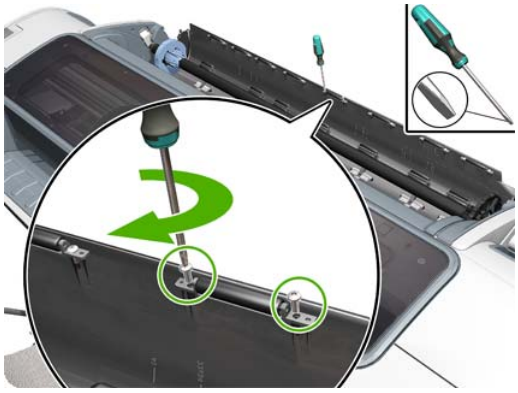

7. Close the roll cover.

Front Panel

Removal

1. Switch off the printer and remove the power cable.
2. Open the Window.

3. Squeeze the top edge of the front panel strongly enough to release the attachment clips, and begin rotating the Front Panel vertically in the next step.

4. Rotate the front panel vertically.

5. Disconnect the interface cable from the Front Panel.

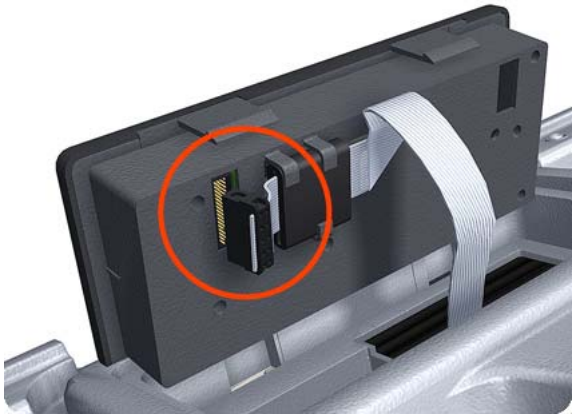

6. Push in the clip that prevents the Ferrite Core from being removed.

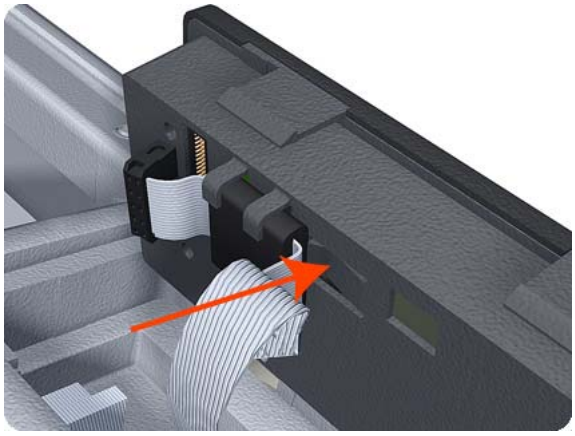

7. Slide the Ferrite Core out of the brackets.

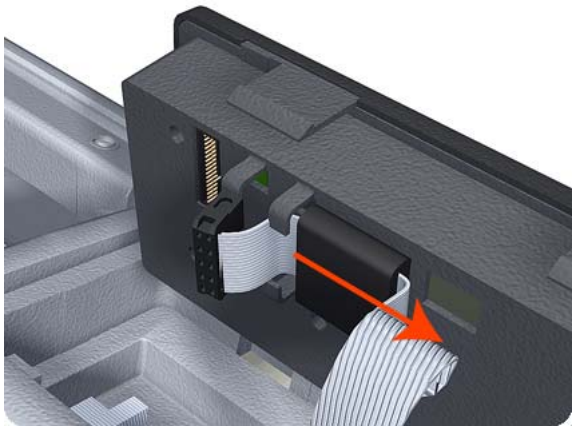

8. Remove the Front Panel.

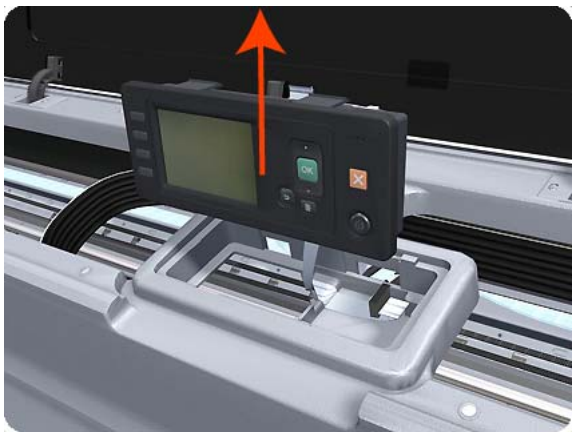

NOTE: When you finish installing or replacing this component, you must perform the necessary Service Calibrations. To find which calibrations you must perform, see Service Calibration Guide to Removal and Installation on page 184.

NOTE: When you reinstall the Front Panel, you must make sure that the Ferrite Core is correctly positioned. The Ferrite Core is necessary to avoid electrostatic interference being generated.

Front Trim, Left

Removal

1. Switch off the printer and remove the power cable.
2. Remove the Cover, Front on page 235.
3. Remove the Media Output Assembly on page 313.
4. Remove three T-20 screws that secure the Left Front Trim to the printer.

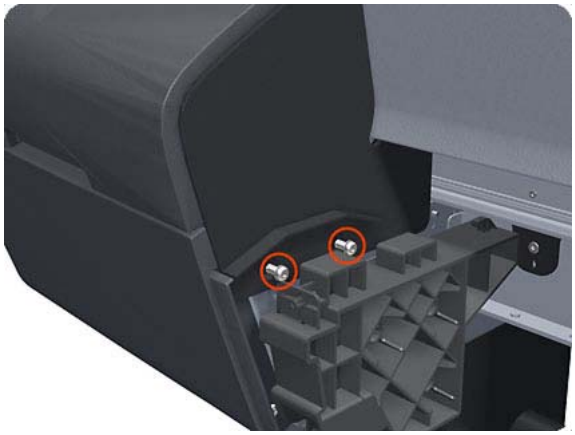

5. Open the Left Ink Cartridge Door.

6. Unclip the Left Front Trim.

7. Remove Left Front Trim from the printer.

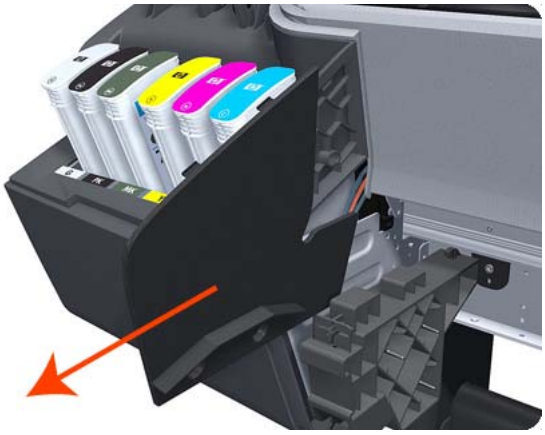

Front Trim, Right

Removal

1. Switch off the printer and remove the power cable.
2. Remove the Cover, Front on page 235.
3. Remove the Media Output Assembly on page 313.
4. Remove the two T-20 screws that secure the Right Front Trim to the printer.

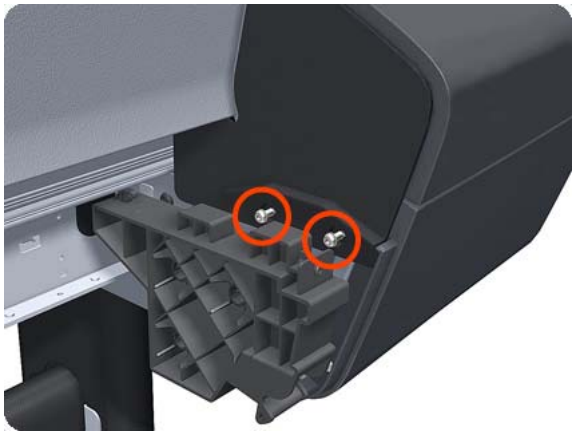

5. Open the Right Ink Cartridge Door by applying sharp pressure to the right side of the door and lifting firmly where the door meets the Right Cover. Use your hands. When the door is unclipped from the pressure applied to the right side of the door, you will hear a sound that corresponds to the clip.

NOTE: Do **not** use a screwdriver or other tool to open the Right Ink Cartridge Door.

6. Unclip the Right Front Trim.

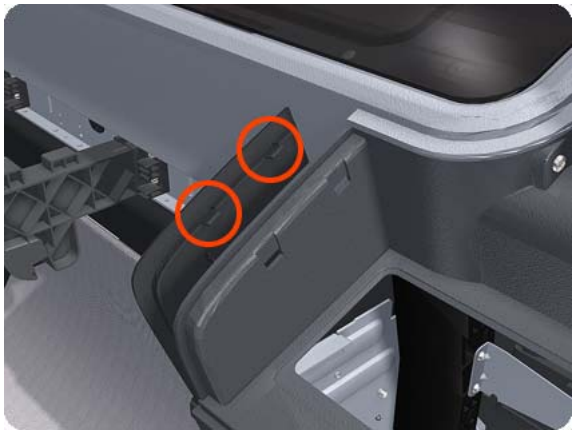

7. Remove Right Front Trim from the printer.

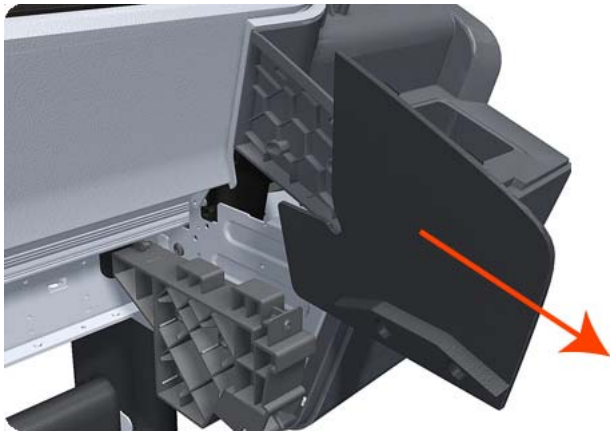

Full Bleed Foam

Removal

The complete Full Bleed Foam is constructed of three separate sections, left, center and right. This procedure describes how to remove the left section only. Removal of the other two sections is done in the same way.

1. Switch off the printer and remove the power cable.
2. Open the Window.
3. Remove the Left Full Bleed Foam from the left platen, and remove the Platen Middle Foams that are exposed once the Full Bleed Foam has been removed.

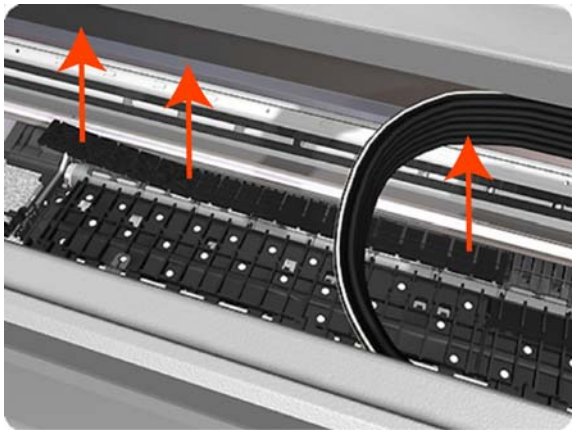

NOTE: When you reinstall the full bleed foams, take care to correctly seat them to avoid possible damage to the Carriage Assembly

Hard Disk Drive

Removal and installation

1. Remove the Formatter on page 266.
2. Unscrew four screws in the formatter.

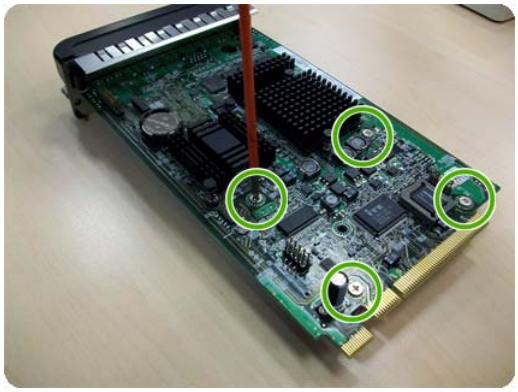

3. Remove the hard disk drive from the formatter by applying force in the direction of the arrow.

4. Insert a new hard disk drive.

NOTE: If you try to insert a previously used hard disk drive, the printer displays a System Error and will not start successfully.

5. Replace all screws that you removed earlier.

Ink Cartridge Door, Left

Removal

1. Switch off the printer and remove the power cable.
2. Open the Left Ink Cartridge Door.

3. Unclip the left side of the Left Ink Cartridge Door.

4. Unclip the right side of the Left Ink Cartridge Door.

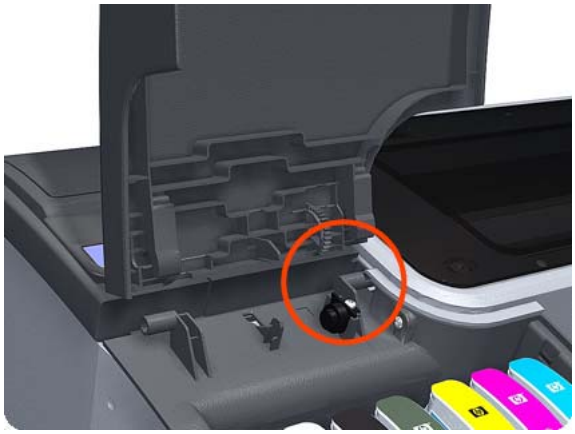

5. Remove the Left Ink Cartridge Door.

Ink Cartridge Door, Right

Removal

1. Switch off the printer and remove the power cable.
2. Open the Right Ink Cartridge Door by applying **sharp pressure** to the right side of the door and lifting **firmly** where the door meets the Right Cover. Use your hands. When the door is unclipped from the pressure applied to the right side of the door, you will hear a sound that corresponds to the clip.

NOTE: Do **not** use a screwdriver or other tool to open the Right Ink Cartridge Door.

3. Unclip the right side of the Right Ink Cartridge Door.

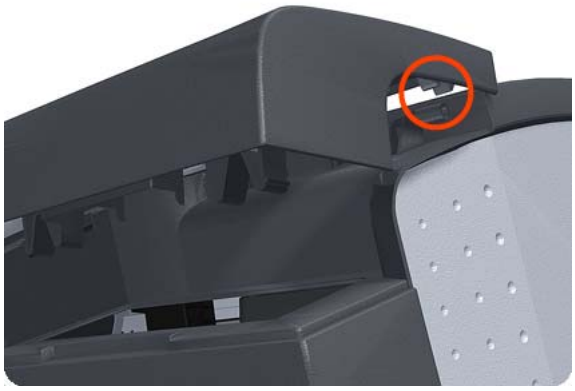

4. Unclip the left side of the Right Ink Cartridge Door.

5. Remove the Right Ink Cartridge Door.

Ink Supply Station, Left

Removal

1. Switch off the printer and remove the power cable.
2. Remove the Cover, Left on page 236.
3. Remove two T-10 screws that secure the Left Side Plate of the Left Ink Supply Station.

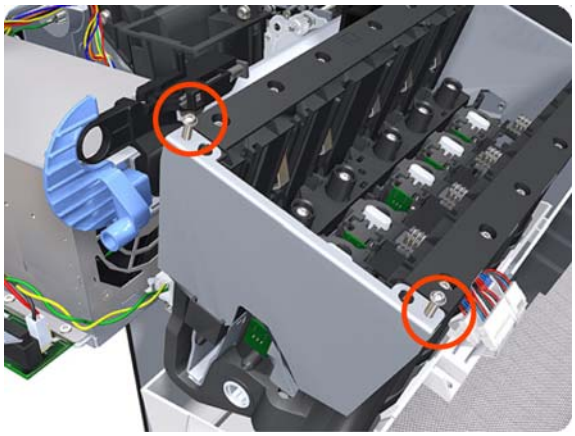

4. Remove the Left Side Plates of the Left Ink Supply Station.

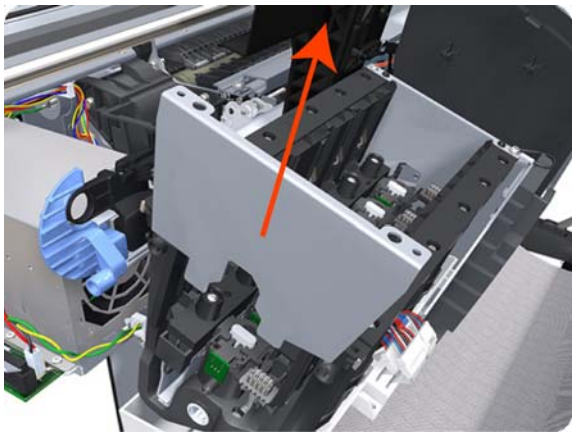

5. Remove two T-10 screws that secure the Right Side Plate of the Left Ink Supply Station.

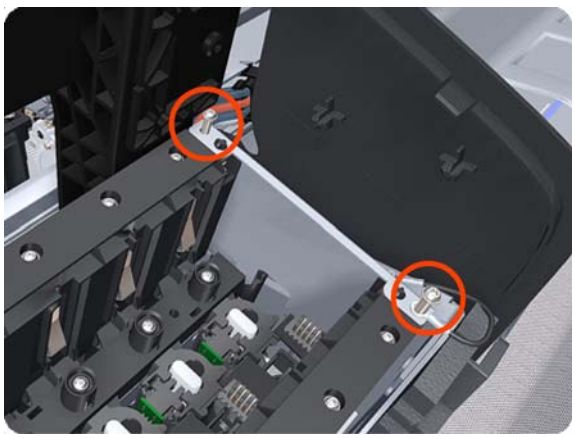

6. Remove the two Left Ink Supply Station bonding cables.

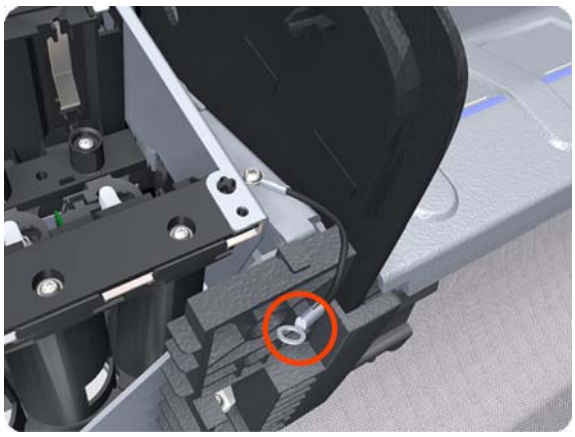

7. Remove the Right Side Plate of the Left Ink Supply Station.

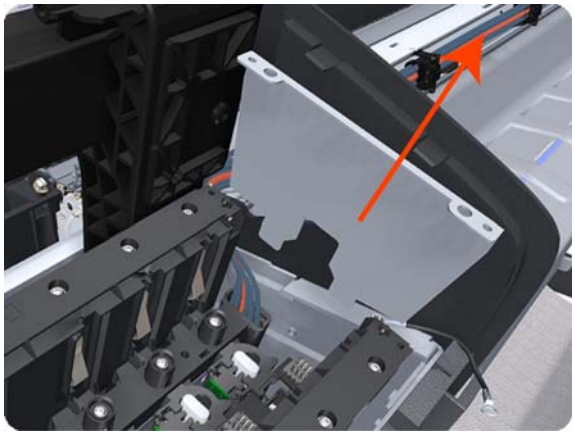

8. Remove the T-20 screw that secures the Left Ink Supply Station to the printer.

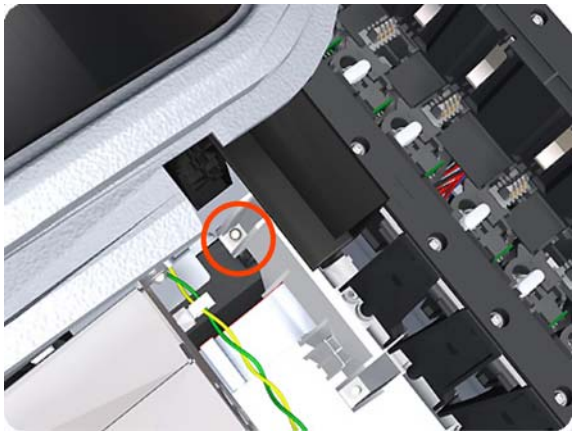

9. Remove the two T-20 screws that secure the Left Ink Supply Station to the printer.

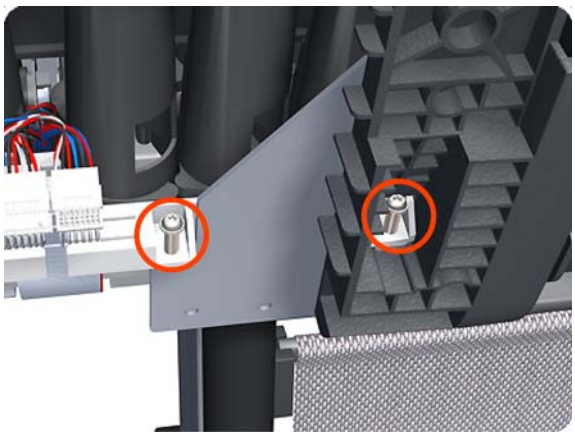

10. Disconnect the four connectors from the Left Ink Supply Station.

NOTE: If you need to change the ISS Harness Cable, make sure you keep the previously used plastic connector. The new cable will arrive with a female end, which you will replace with the existing male end.

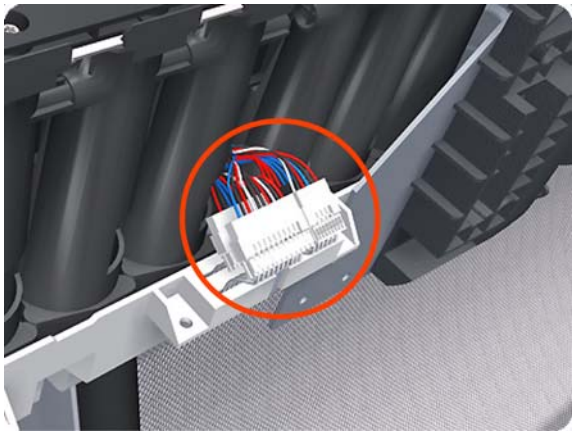

11. Unroute the four cables from the Left Ink Supply Station.

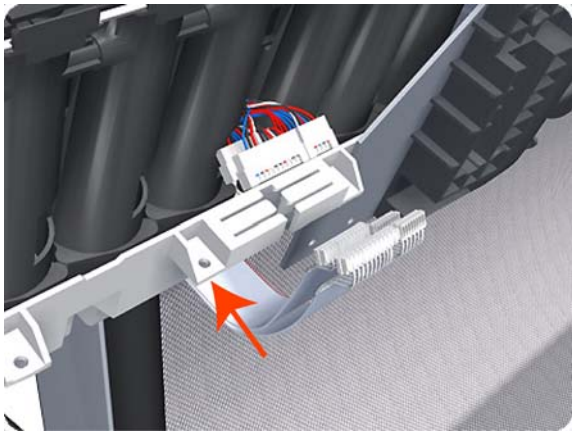

12. Carefully lift the Cartridge Tubes Connector out of the Left Ink Supply Station.

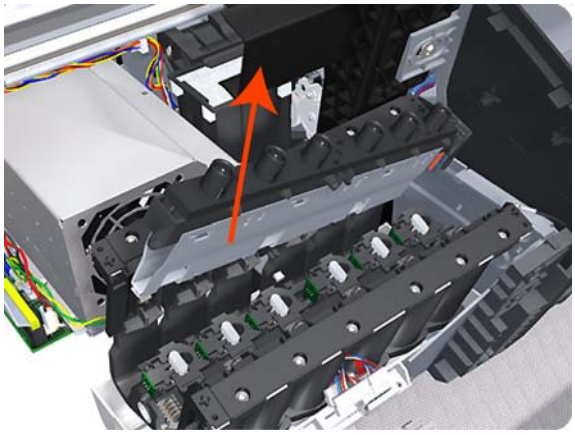

13. Carefully lift the Left Ink Supply Station enough so that you can rotate it counterclockwise to release the front attachment from the printer.

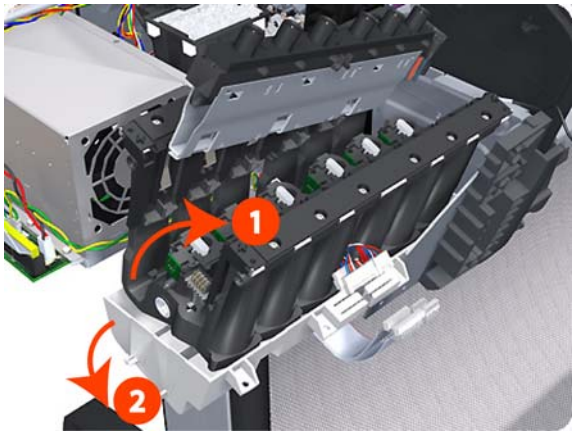

14. Carefully lift the Left Ink Supply Station completely out of the printer.

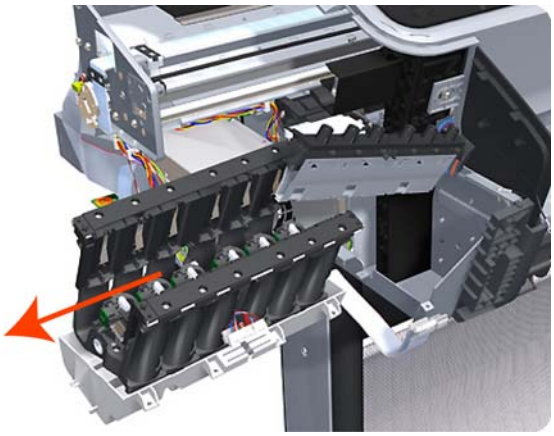

NOTE: When you finish installing or replacing this component, you must perform the necessary Service Calibrations. To find which calibrations you must perform, see Service Calibration Guide to Removal and Installation on page 184.

Ink Supply Tubes

Removal

1. Switch off the printer and remove the power cable.
2. Remove the Cover, Right on page 241.
3. Remove the Cover, Left on page 236.
4. Remove the Front Panel on page 270.
5. Remove the Cover, Top on page 244.
6. Open the Carriage Cover.

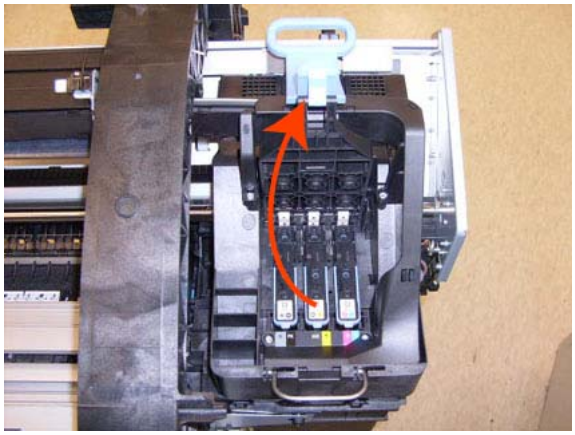

7. Remove all the Printheads.

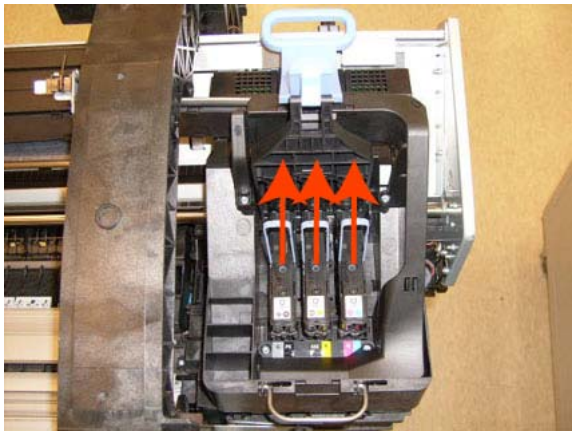

8. Unscrew the small cover of the Carriage PCA.

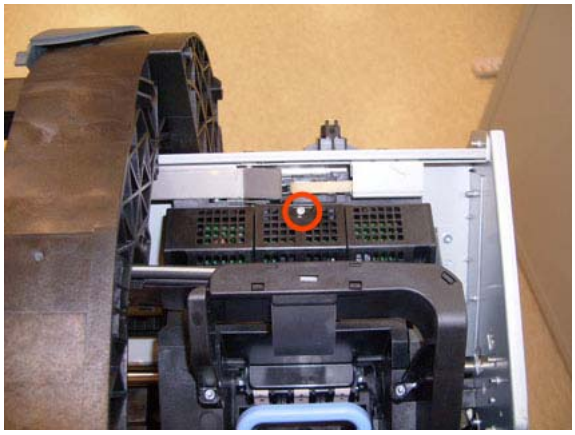

9. Remove the small cover of the Carriage PCA.

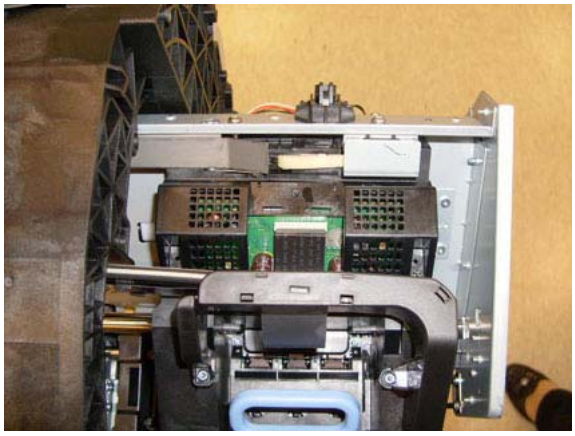

10. Disconnect the ribbon Trailing Cable from the Carriage PCA.

11. Remove the four T-15 screws that secure the Ink Supply Tubes to the Carriage Assembly.

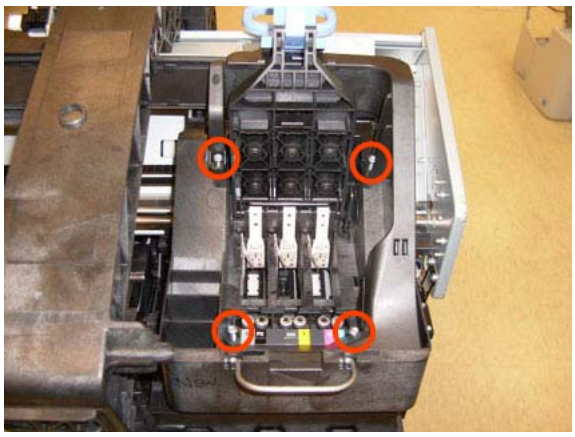

12. Carefully lift out the Ink Supply Tubes and close the carriage cover at the same time.

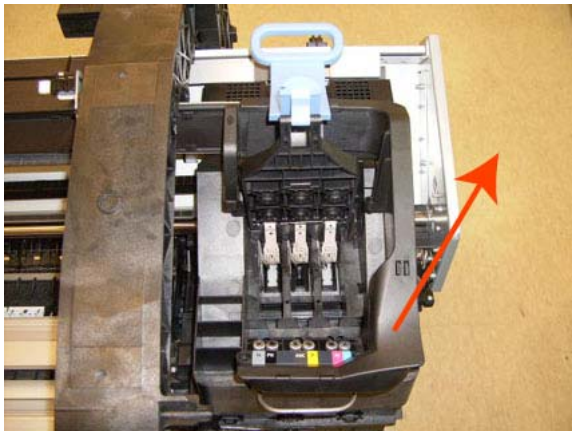

13. Close and lock the Carriage Cover.

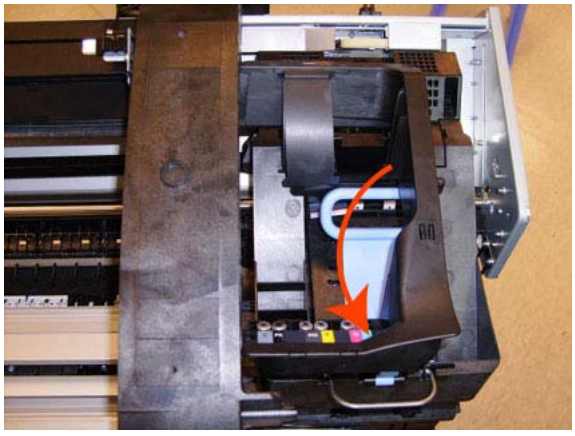

14. Carefully move the Ink Supply Tubes into the print path.

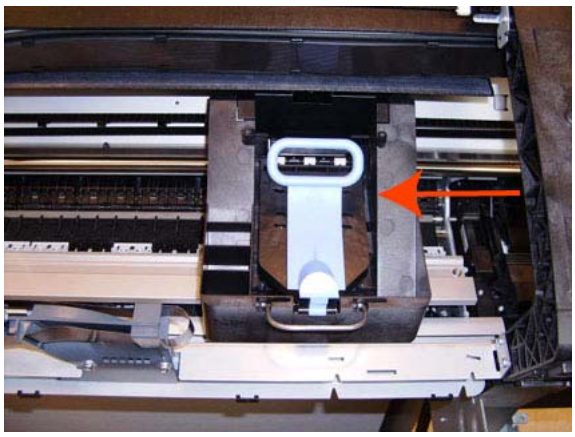

15. Remove the top T-15 screw that secures Ink Supply Tubes guide to the printer.

16. Remove the two front T-15 screws that secure Ink Supply Tubes guide to the printer.

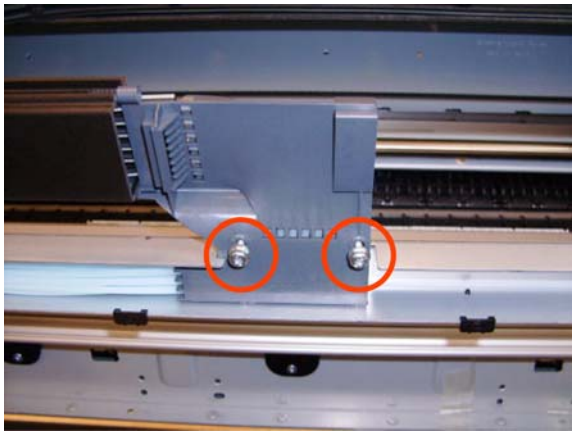

17. Carefully lift the Ink Supply Tubes guide enough until you can slide it forwards out of the printer.

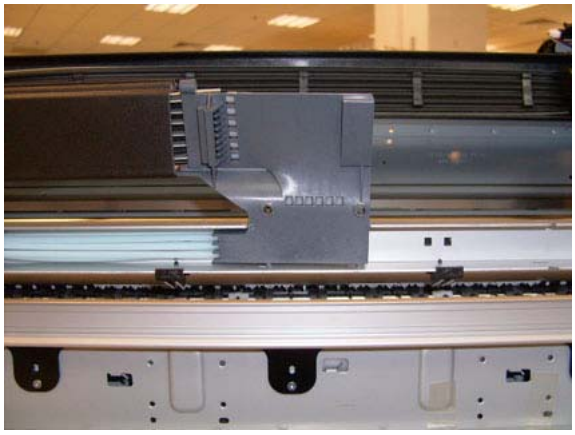

18. Use a flat-bladed screwdriver to release all the Ink Supply Tubes clamps from the printer.

19. Remove two T-10 screws that secure the Left Side Plate of the Left Ink Supply Station.

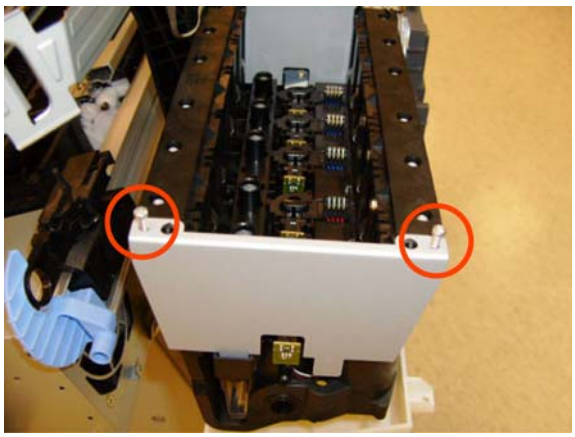

20. Remove the Left Side Plates of the Left Ink Supply Station.

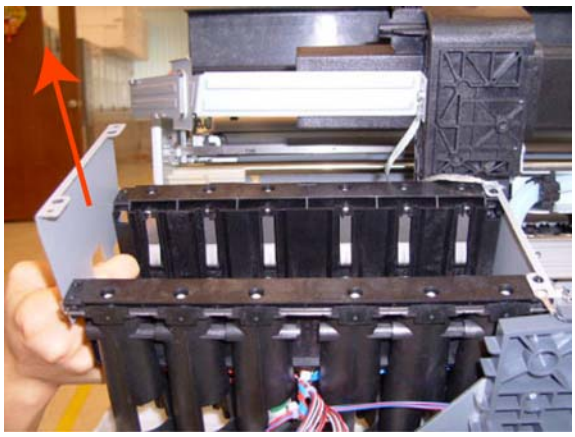

21. Remove two T-10 screws that secure the Right Side Plate of the Left Ink Supply Station.

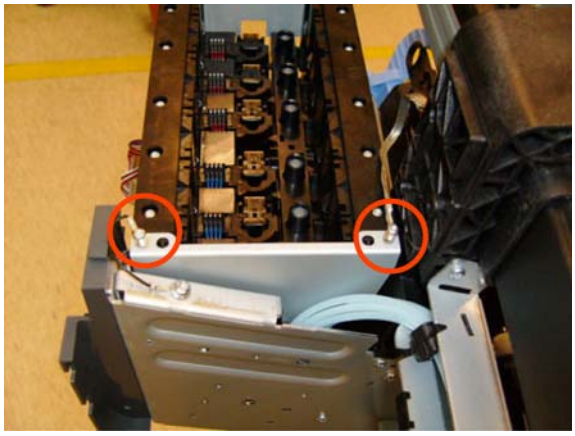

22. Remove the Left Ink Supply Station bonding cable.

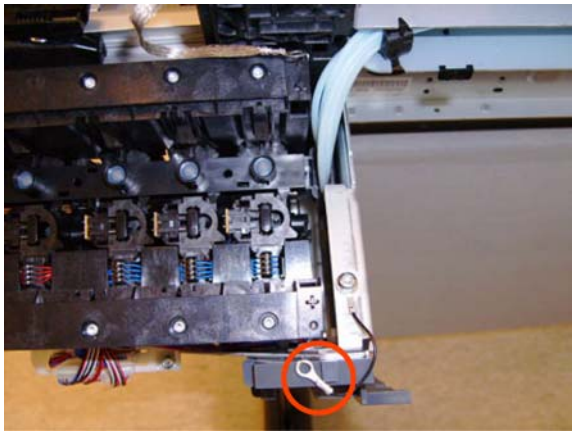

23. Remove the Right Side Plate of the Left Ink Supply Station.

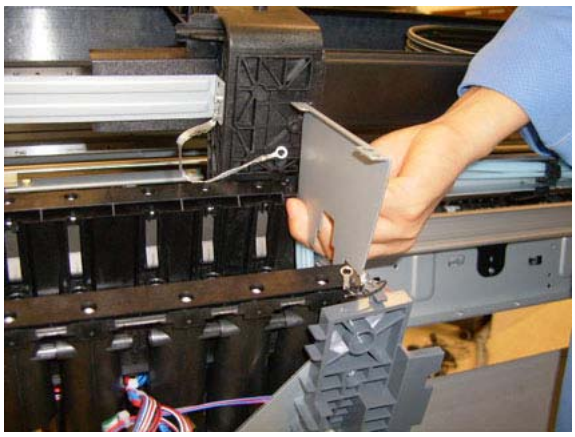

24. Carefully lift the Ink Supply Tubes out of the printer.

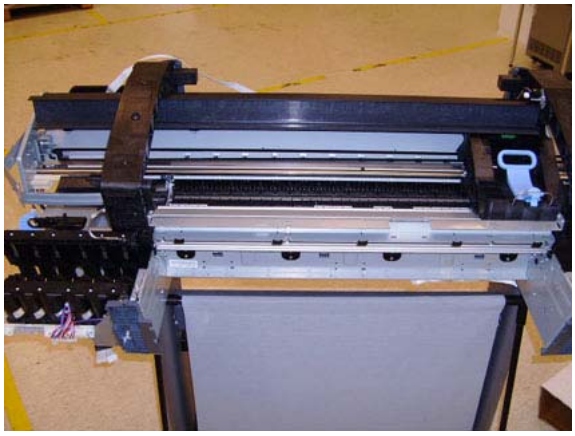

25. Carefully remove the Ink Supply Tubes from the assembly.

NOTE: When you finish installing or replacing this component, you must perform the necessary Service Calibrations. To find which calibrations you must perform, see Service Calibration Guide to Removal and Installation on page 184.

Ink Supply Tubes Support Rail

Removal

1. Switch off the printer and remove the power cable.
2. Remove the Cover, Right on page 241.
3. Remove the Cover, Left on page 236.
4. Remove the Front Panel on page 270.
5. Remove the Cover, Rear on page 240.
6. Remove the Cover, Top on page 244.
7. Remove two T-15 screws that secure the Ink Supply Tubes Support Rail to the right Top Cover Support.

8. Carefully slide the Ink Supply Tubes Support Rail to the left until the right end is clear of the right Top Cover Support.

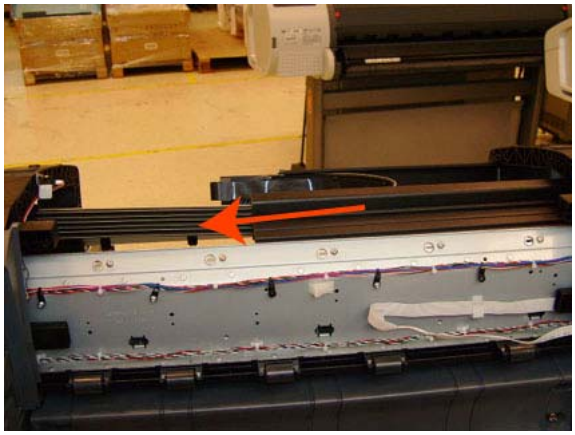

9. Remove the Ink Supply Tubes Support Rail from the printer.

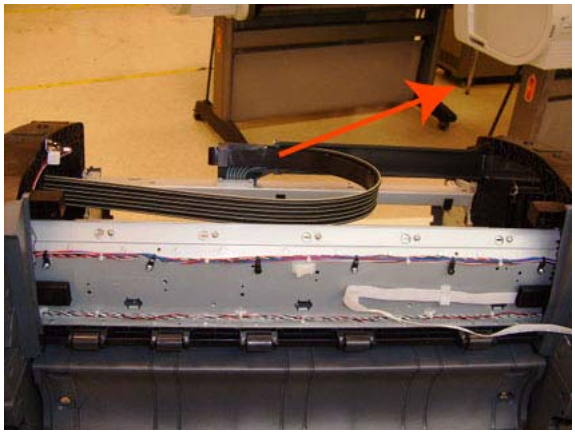

NOTE: When you finish installing or replacing this component, you must perform the necessary Service Calibrations. To find which calibrations you must perform, see Service Calibration Guide to Removal and Installation on page 184.

Line Sensor

Removal

1. Switch off the printer and remove the power cable.
2. Remove the Cover, Right on page 241.
3. Remove the Cover, Left on page 236.
4. Remove the Front Panel on page 270.
5. Remove the Cover, Top on page 244.
6. Remove the Window Position Sensor on page 398.
7. Open the Carriage Cover.

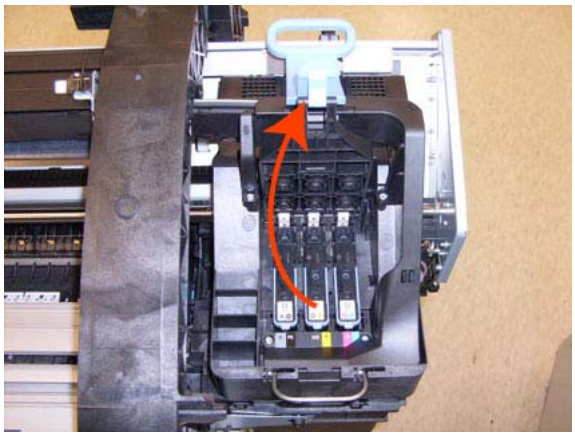

8. Remove all the Printheads.

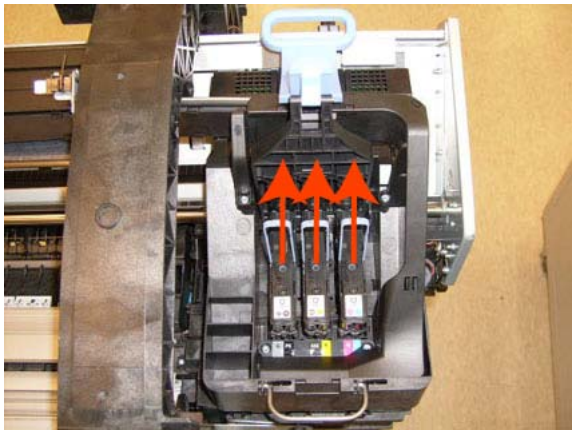

9. Unscrew the small cover of the Carriage PCA.

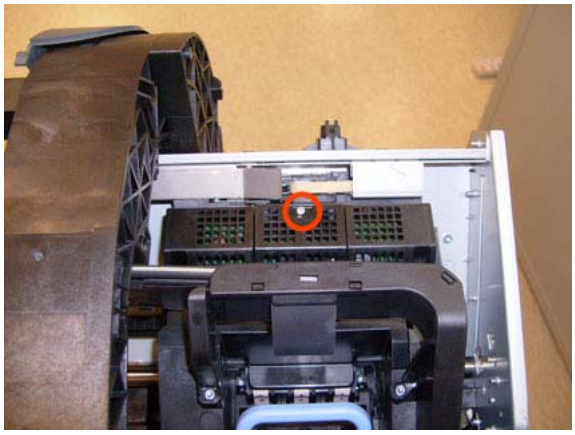

10. Remove the small cover of the Carriage PCA.

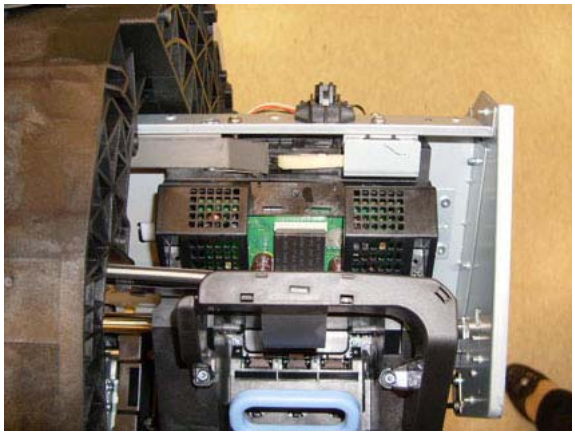

11. Disconnect the ribbon cable of the Trailing Cables from the Carriage PCA.

12. Remove the four T-15 screws that secure the Ink Supply Tubes to the Carriage Assembly.

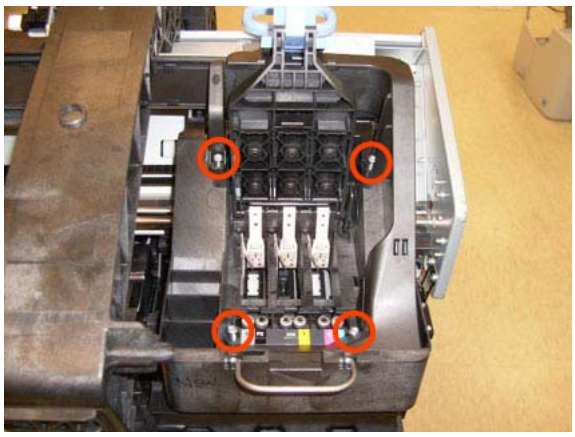

13. Carefully lift out the Ink Supply Tubes and close the carriage cover at the same time.

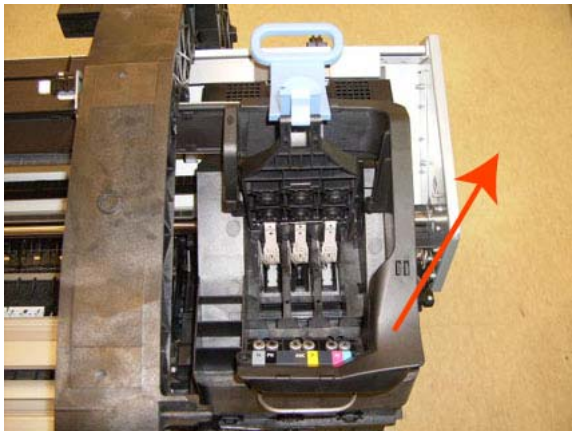

14. Close and lock the Carriage Cover.

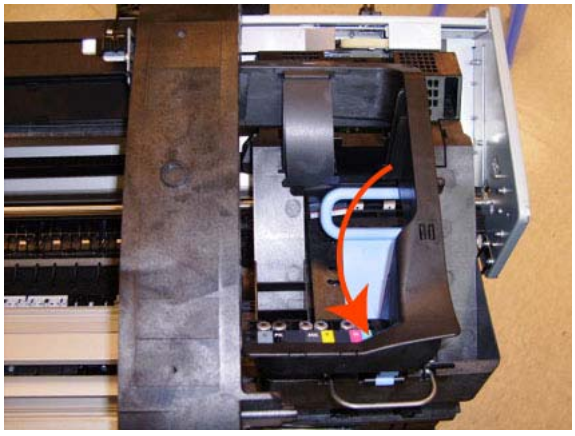

15. Loosen the T-10 uncapping screw sufficiently so you can move the Carriage Assembly manually.

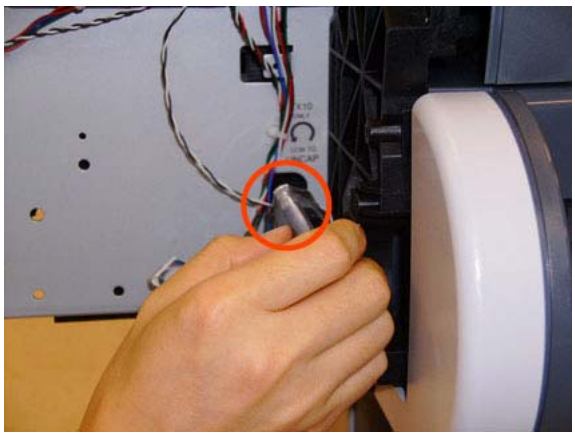

16. Push the Carriage Assembly into the print path.

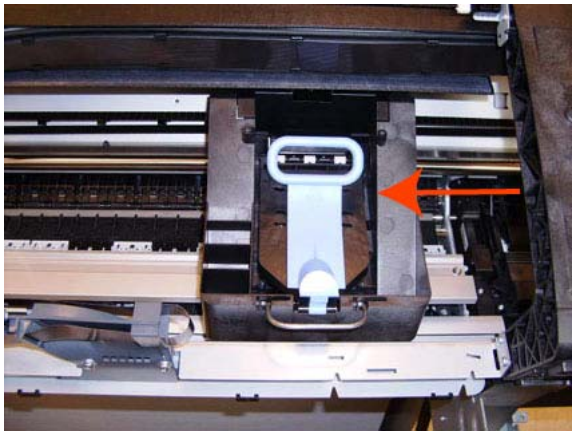

17. Remove the cover on each side of the Carriage PCA using a screwdriver unclip it.

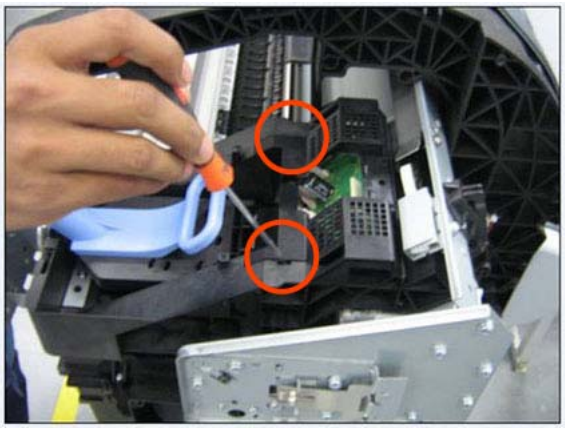

18. Disconnect the Line Sensor electrical connection from the Carriage PCA.

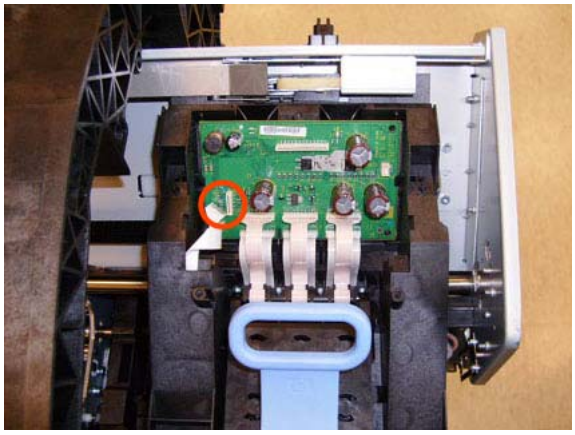

19. Carefully unroute the Line Sensor cable from the Carriage Assembly.

20. Remove one T-10 screw that secures the Line Sensor to the Carriage Assembly.

21. Remove the Line Sensor from Carriage Assembly.

NOTE: When you finish installing or replacing this component, you must perform the necessary Service Calibrations. To find which calibrations you must perform, see Service Calibration Guide to Removal and Installation on page 184.

Media Advance Drive

Removal

1. Switch off the printer and remove the power cable.
2. Remove the Cover, Left on page 236.
3. Remove the Electronics Module Main PCA and PSU on page 256.
4. Remove the Spittoon, Left on page 374.
5. Remove the Encoder Disk and Encoder Sensor on page 260.
6. Unroute the Media Advance Drive power cable.

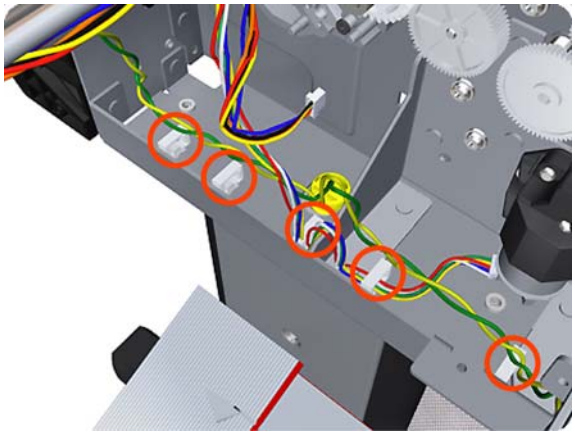

7. Remove three T-20 screws that secure the Media Advance Drive to the printer.

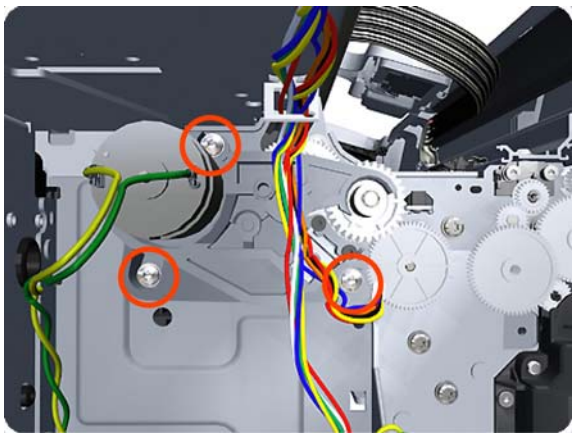

8. Grip the motor housing of the Media Advance Drive and gently pull it towards you sufficiently to allow you disengage the Media Advance Drive from the printer.

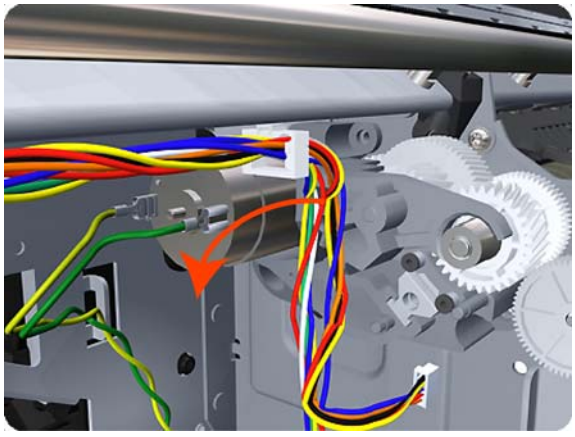

9. Carefully lift the Media Advance Drive out of the printer.

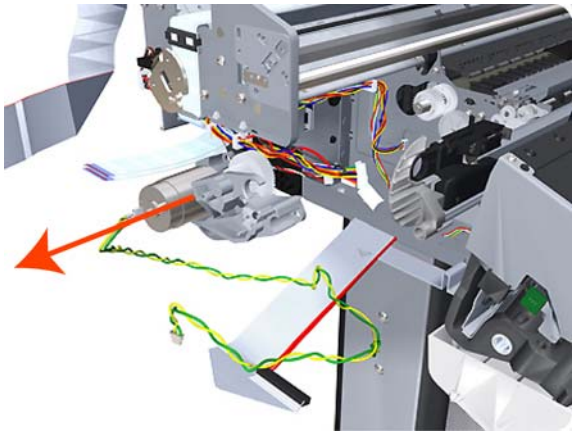

Installation without encoder sensor adjustment

Use the following procedure to install and adjust a new Media Advance Drive. This is the normal procedure that should be followed in most cases. You will need Media Advance Drive Adjustment Tool from the Tool Kit (Q6683-67001).

1. Carefully position the Media Advance Drive in the printer.

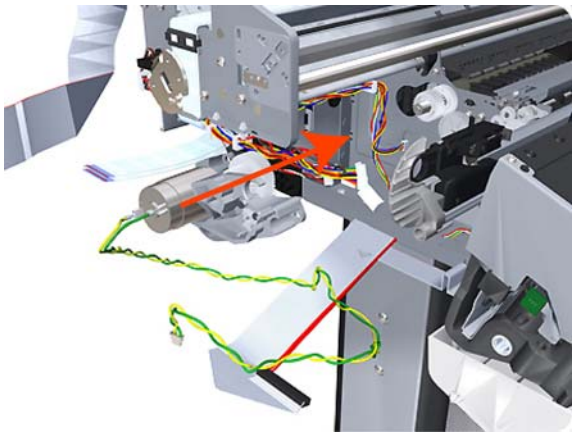

2. Be careful not to touch the encoder sensor adjustment screw; not even when replacing the encoder disc and sensor.

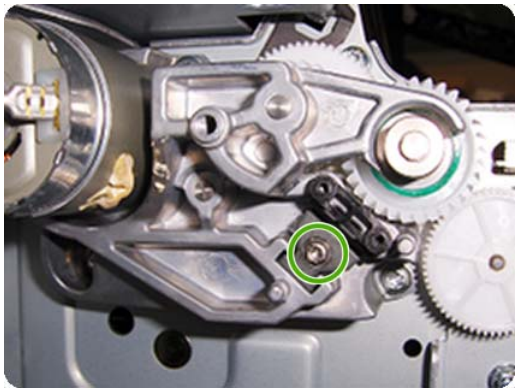

3. Insert the three T-15 attachment screws, but do **not** fully tighten them.

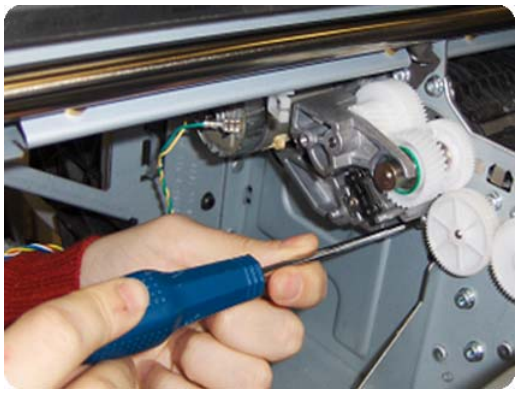

4. Position the Media Advance Drive Adjustment Tool on the end Media Advance Roller shaft, push it firmly onto the shaft and maintain a constant pressure to ensure it is flush to the Media Advance Drive.

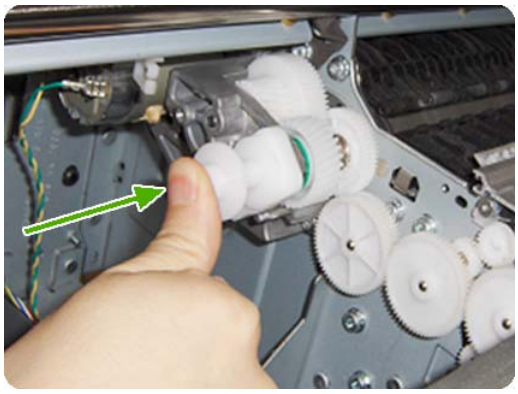

5. While maintaining pressure on the Media Advance Drive Adjustment Tool, fully tighten the three T-15 attachment screws in the order shown.

6. Remove the Media Advance Drive Adjustment Tool.

Installation with encoder sensor adjustment

Use the following procedure to install and adjust a new Media Advance Drive, and to adjust the encoder sensor. This procedure is recommended only when the motor mount has to be replaced or the encoder sensor has to be readjusted. You will need Media Advance Drive Adjustment Tool from the Tool Kit (Q6683-67001).

1. Carefully position the Media Advance Drive in the printer.

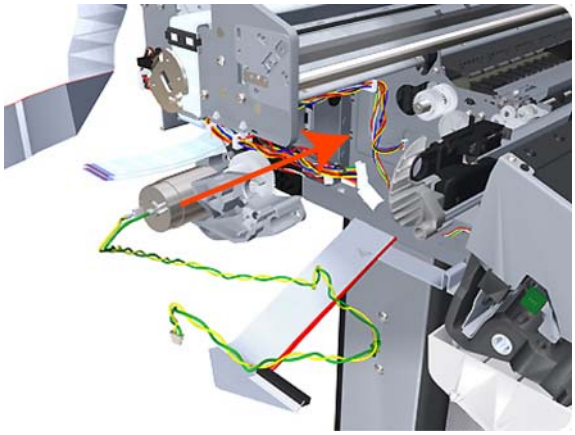

2. Insert the three T-15 attachment screws, but do **not** fully tighten them.

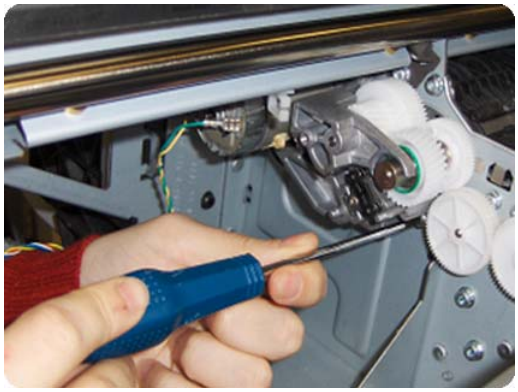

3. Loosen the encoder sensor adjustment screw.

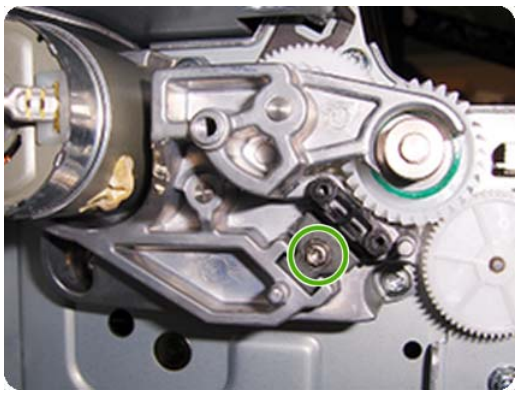

4. Add the Encoder Sensor Tool to the Media Drive Adjustment Tool.

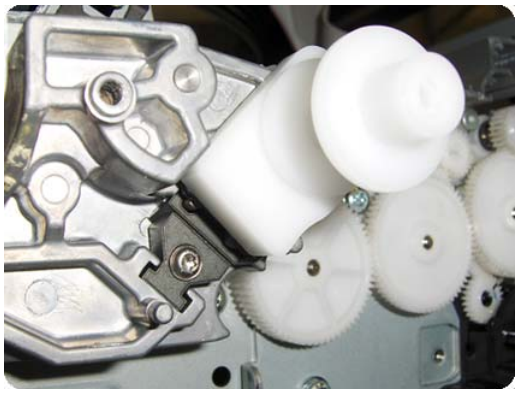

5. Position the Media Advance Drive Adjustment Tool on the end Media Advance Roller shaft, push it firmly onto the shaft and maintain a constant pressure to ensure it is flush to the Media Advance Drive.

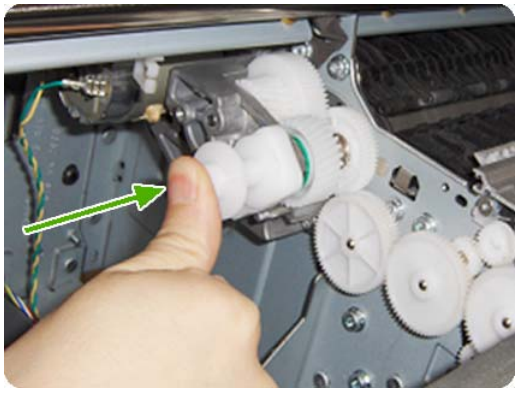

6. While maintaining pressure on the Media Advance Drive Adjustment Tool, fully tighten the three T-15 attachment screws in the order shown.

7. While maintaining pressure on the Media Advance Drive Adjustment Tool, fully tighten the encoder sensor adjustment screw.

8. Remove the Media Advance Drive Adjustment Tool.

Encoder disk assembly

1. Remove the paper that protects the glue of a new encoder.

2. Pre-assemble the encoder on the roller without using pressure.

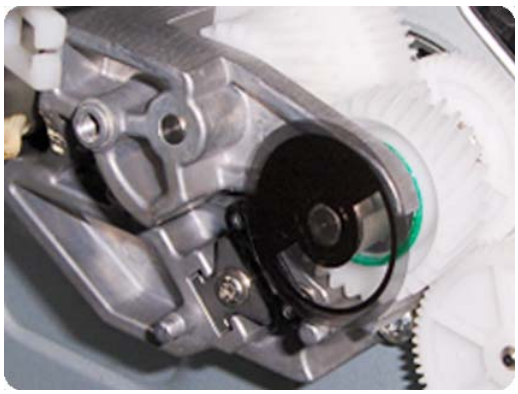

3. Press the encoder using the Media Advance Drive Adjustment Tool (reversed) so that it sticks to the roller.

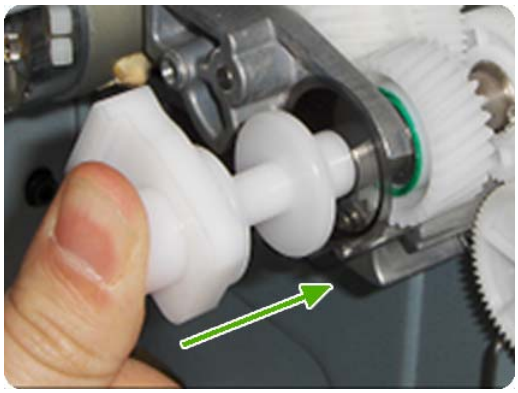

NOTE: When you finish installing or replacing these components, you must perform the necessary Service Calibrations. To find which calibrations you must perform, see Service Calibration Guide to Removal and Installation on page 184.

Media Lever

Removal

1. Switch off the printer and remove the power cable.
2. Remove the Panel, Left on page 318.
3. Unclip the spring from the attachment points on the Media Lever and Left Cover.

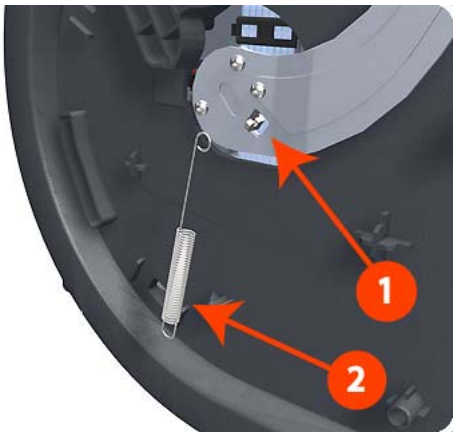

4. Remove three T-15 screws that secure the Media Lever.

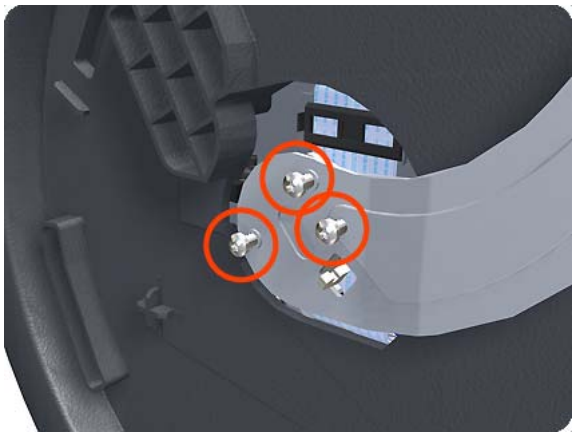

5. Lift the Media Lever of the mounting.

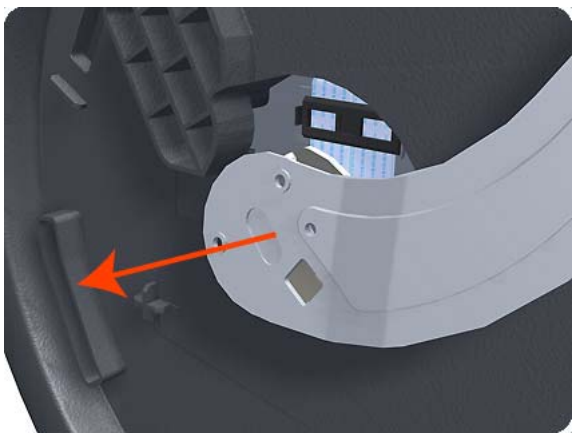

6. Remove the Media Lever from the printer.

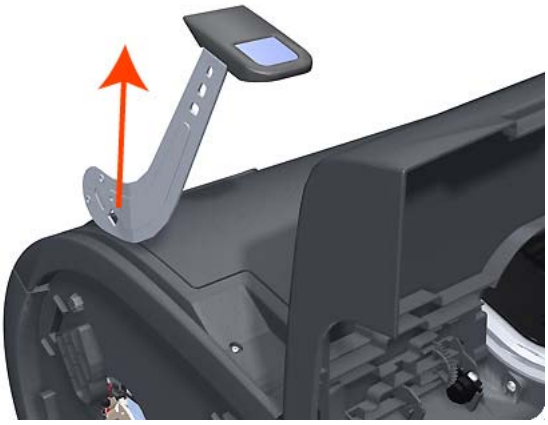

Media Lever Position Sensor

Removal

1. Switch off the printer and remove the power cable.
2. Raise the Media Lever.
3. Remove the Cover, Left on page 236.
4. Disconnect the Media Lever Position Sensor.

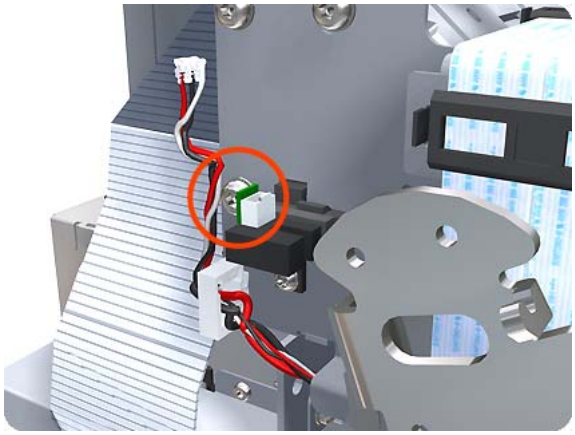

5. Remove one T-10 screw that secures the Media Lever Position Sensor to the Scan Side Panel.

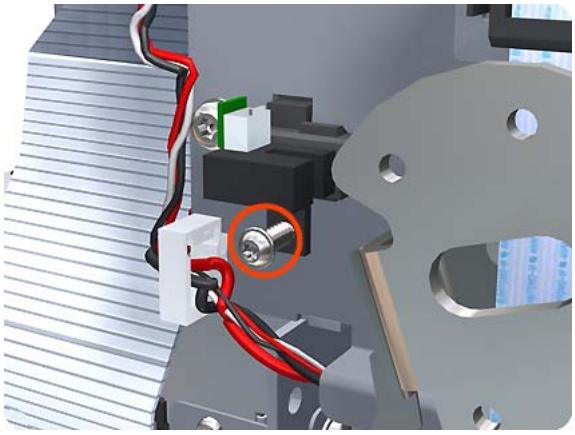

6. Rotate the Media Lever Position Sensor vertically to disengage the attachment lug from the Scan Side Panel.

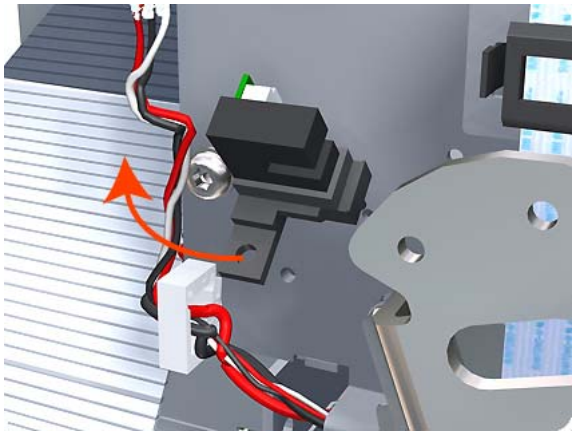

7. Remove the Media Lever Position Sensor.

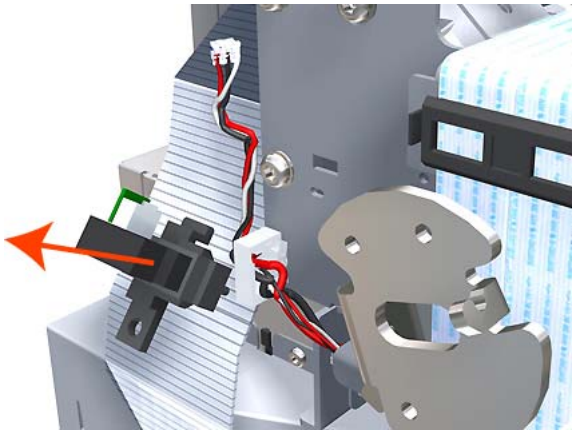

NOTE: When you finish installing or replacing this component, you must perform the necessary Service Calibrations. To find which calibrations you must perform, see Service Calibration Guide to Removal and Installation on page 184.

Media Output Assembly

Removal

1. Switch off the printer and remove the power cable.
2. Remove the Cover, Front on page 235.
3. Remove four T-15 screws that secure the Media Output Assembly to the printer.

4. Release the four attachment clips.

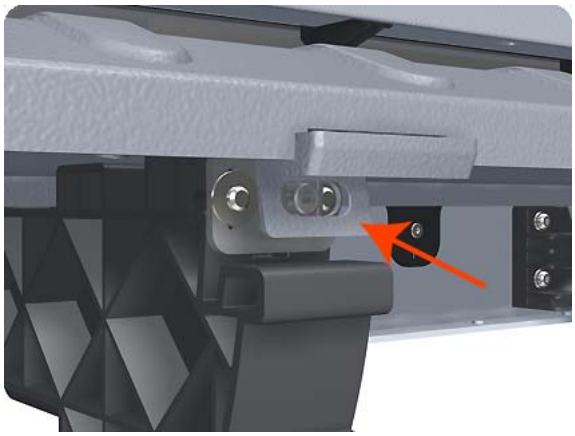

5. Lift the front of the Media Output Assembly.

6. Slide the Media Output Assembly forwards out of the printer.

Out-of-paper Sensor

Removal

1. Switch off the printer and remove the power cable.
2. Remove the Spindle on page 373.
3. Remove the Cleanout on page 231.
4. Unroute the Out Of Paper Sensor electrical cables from the Clean Out Assembly.

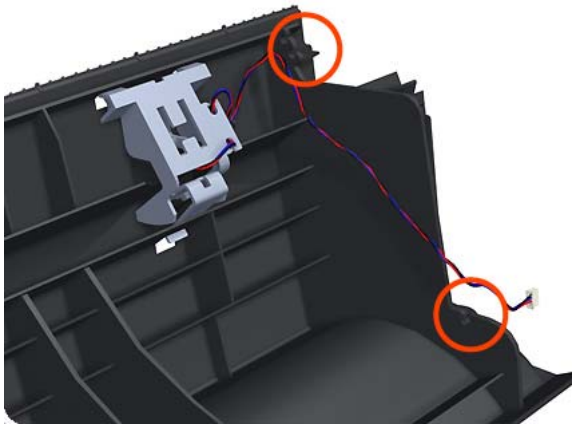

5. Unroute (unwind) the Out Of Paper Sensor electrical cables from the Out Of Paper Sensor cover.

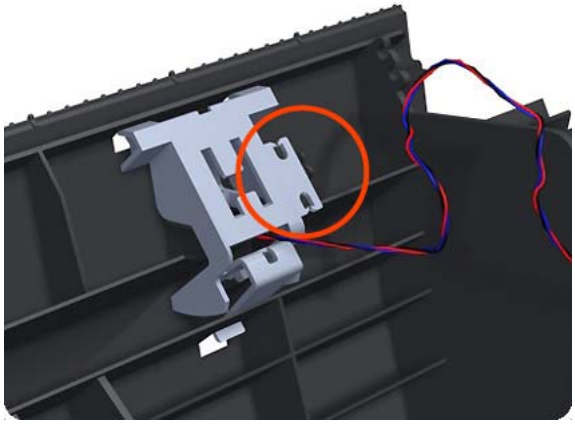

6. Press the clip to remove the Out Of Paper Sensor cover from the Clean Out Assembly.

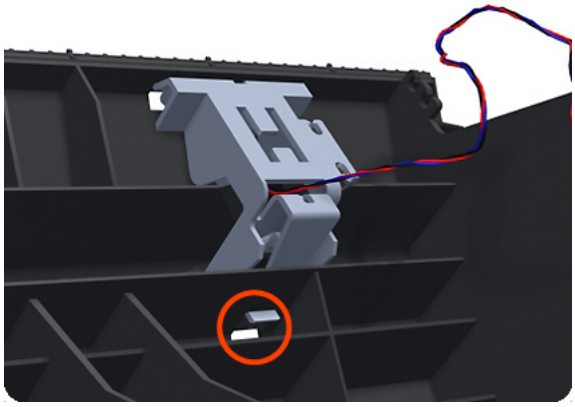

7. Rotate the Out Of Paper Sensor cover approximately 45 degrees.

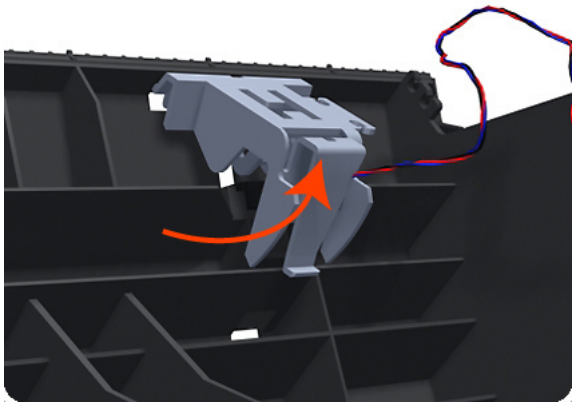

8. Remove the Out Of Paper Sensor cover from the Clean Out Assembly.

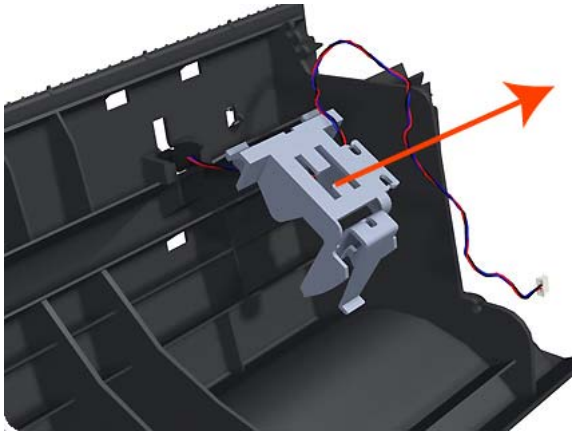

9. Squeeze the Out Of Paper Sensor attachment clips to remove it from the Clean Out Assembly.

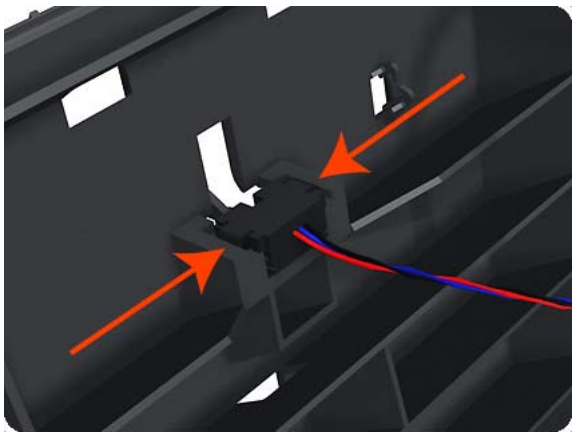

10. Lift the Out Of Paper Sensor out of the Clean Out Assembly.

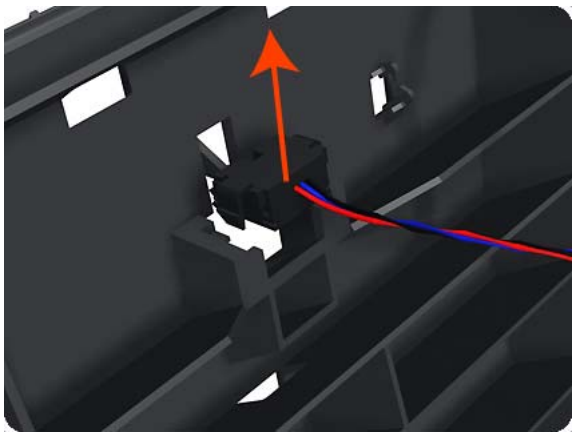

NOTE: When you finish installing or replacing this component, you must perform the necessary Service Calibrations. To find which calibrations you must perform, see Service Calibration Guide to Removal and Installation on page 184.

Panel, Left

This part can be replaced by customers who have the appropriate flier.

Removal

1. Open the ink cartridge cover on the left.

2. Remove the ink cartridges.

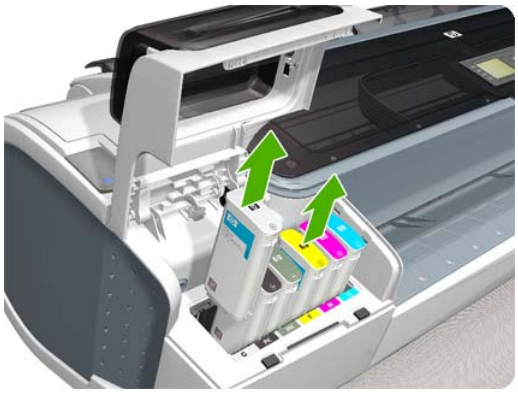

3. Remove the T-15 screw that attaches the left panel to the left cover.

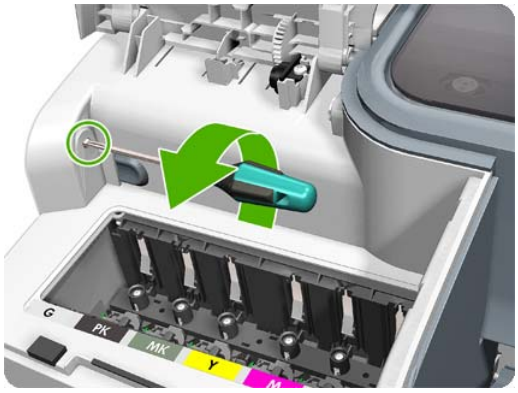

4. Press the clip as shown to free the left panel.

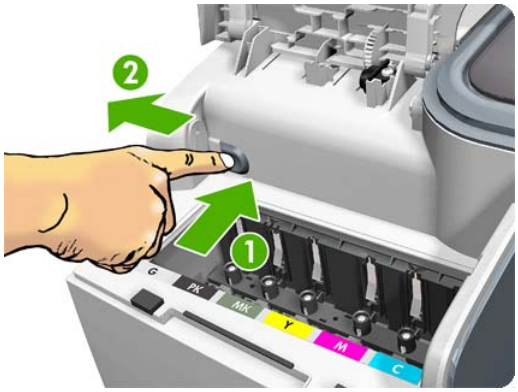

5. Remove the left panel.

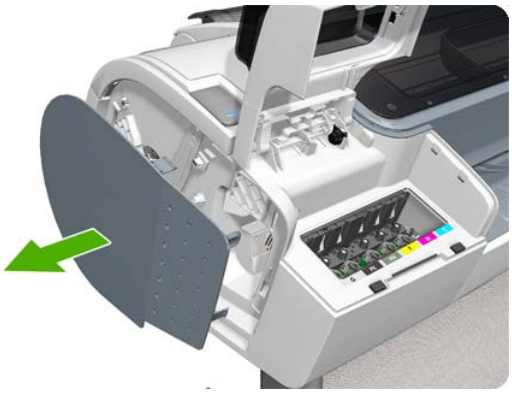

Pen to Paper Space (PPS) Solenoid

Removal

1. Switch off the printer and remove the power cable.
2. Remove the Cover, Right on page 241.
3. Unroute the Pen to Paper Space (PPS) Solenoid cable from the cable clamp.

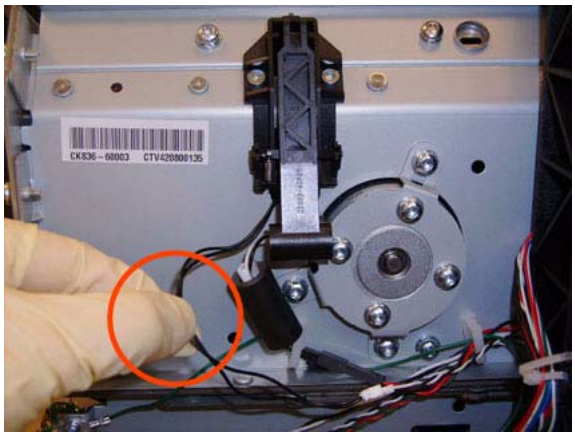

4. Disconnect the Pen to Paper Space (PPS) Solenoid connector from the L1 Data Harness.

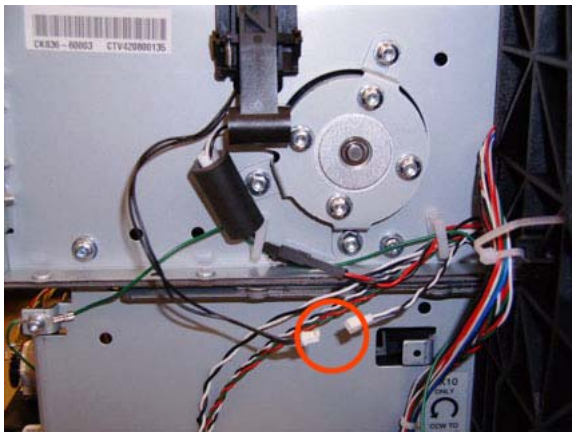

5. Remove two T-10 screws that secure the Pen to Paper Space (PPS) Solenoid to the printer.

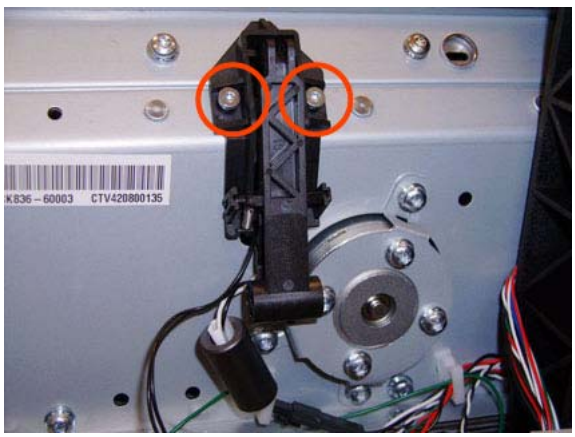

6. Remove the Pen to Paper Space (PPS) Solenoid from the printer.

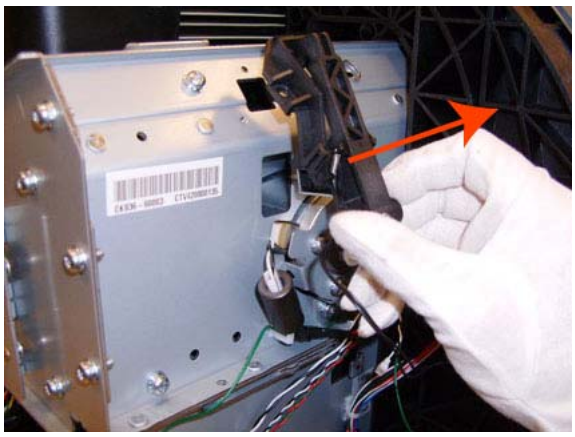

NOTE: When you finish installing or replacing this component, you must perform the necessary Service Calibrations. To find which calibrations you must perform, see Service Calibration Guide to Removal and Installation on page 184.

Pinch Arm Assembly (T1200 only)

These parts can be replaced by customers who have the appropriate flier.

Removal and installation

1. Open the upper or lower roll cover.

2. Remove the spindle.

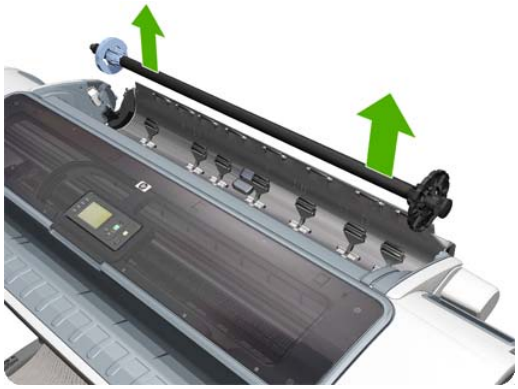

3. Unscrew the pinch arm assembly.

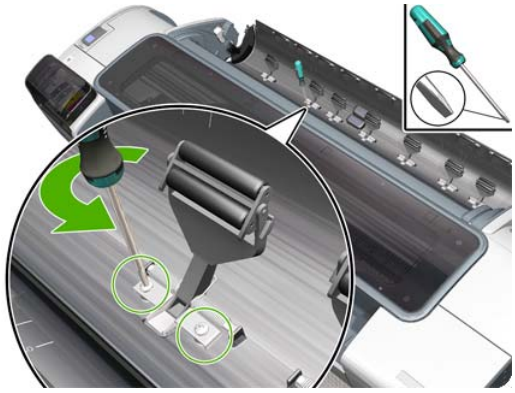

4. Remove the pinch arm assembly.

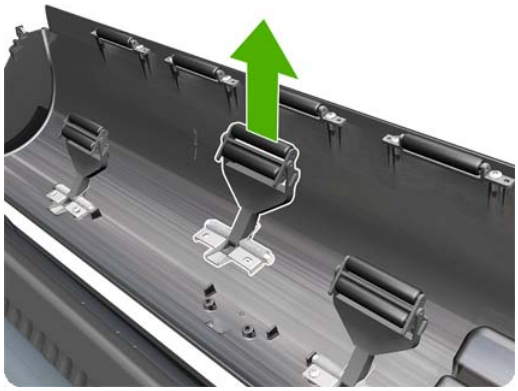

5. Locate the new pinch arm assembly and screws.

6. Fit the pinch arm assembly to the roll cover.

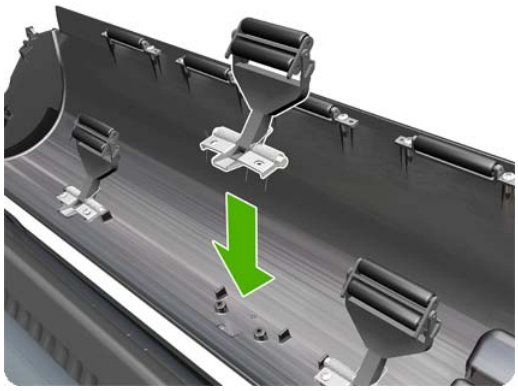

7. Screw the pinch arm assembly to the roll cover.

8. Insert the spindle.

9. Close the roll cover.

Pinchwheel Assembly

Removal

1. Switch off the printer and remove the power cable.
2. Open the Window.
3. Remove the Spindle on page 373.
4. Remove the Roll Guide, Left on page 352.
5. Remove the Roll Guide, Right on page 353.
6. Raise the Media Lever.

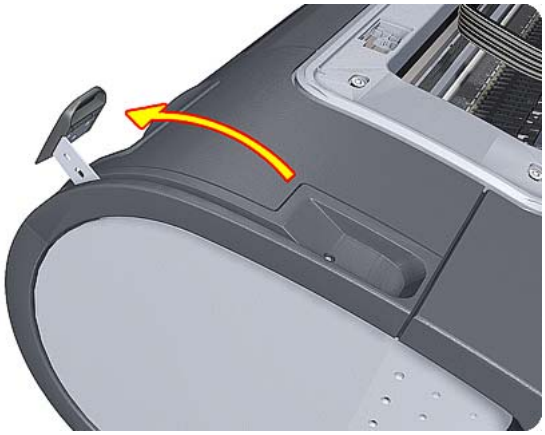

7. Use the Pinchwheel Insertion Tool to remove the spring from the attachment on the printer.

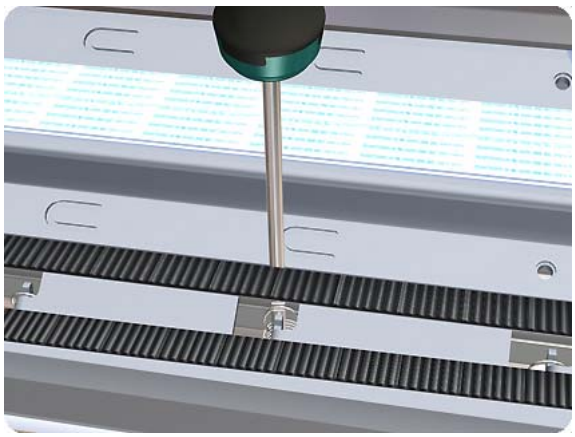

8. Remove two T-10 screws that secure the Pinchwheel Assembly to the printer.

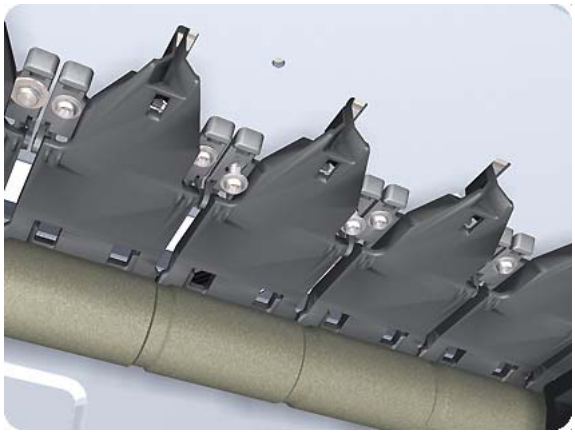

9. Remove the Pinchwheel Assembly from the printer.

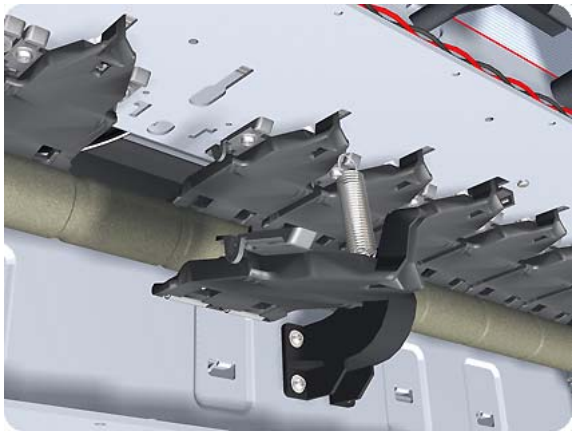

Installation

Use the following procedure to align the Pinchwheel Assembly using the Pinchwheel Alignment Tool during reassembly.

NOTE: Never remove and replace all the Pinchwheel Assemblies at the same time. In order to align a Pinchwheel Assembly, you need a minimum one Pinchwheel Assembly correctly aligned by the manufacturer.

1. Insert the Pinchwheel Insertion Tool through the appropriate access hole for the Pinchwheel Assembly you are installing.

   △ **CAUTION:** Be very careful not to damage the Encoder Strip or the Belt Assembly with the Pinchwheel Insertion Tool.

2. Position the new Pinchwheel Assembly correctly on its hanger.

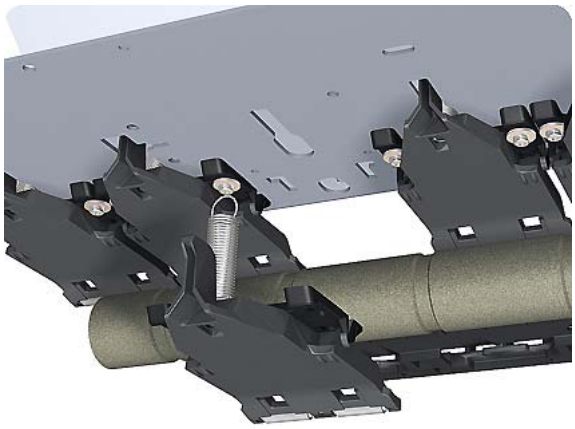

3. Hook the spring of the Pinchwheel Assembly you are installing with the Pinchwheel Insertion Tool.

4. Attach the spring to its attachment point on the hanger and remove the Pinchwheel Insertion Tool.

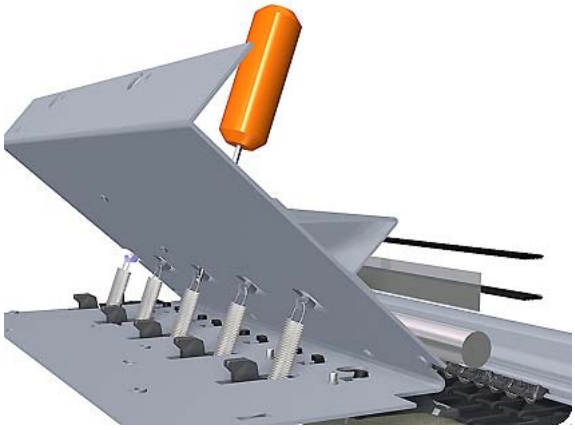

5. Attach the new Pinchwheel Assembly with the two T-15 screws that secure to the printer but do fully **not** tighten the screws.

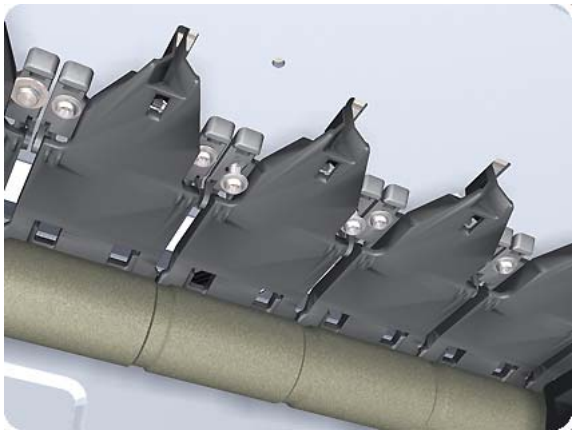

6. Lower the Media Lever.

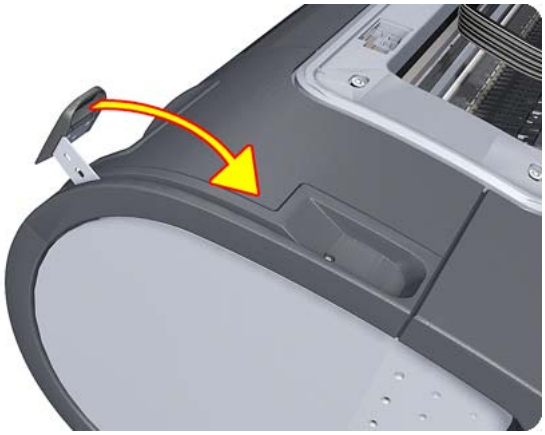

7. Make sure the Pinchwheel Alignment Tool is in the collapsed position.

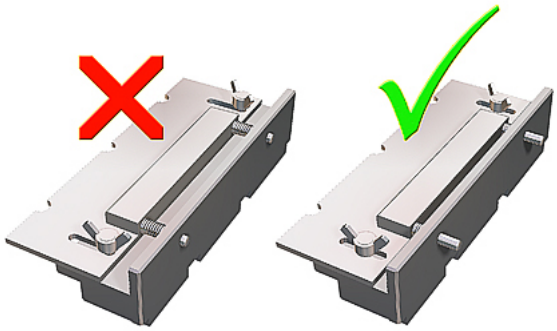

8. Fit the end of the Pinchwheel Alignment Tool to the Pinchwheel Assembly you need to align.

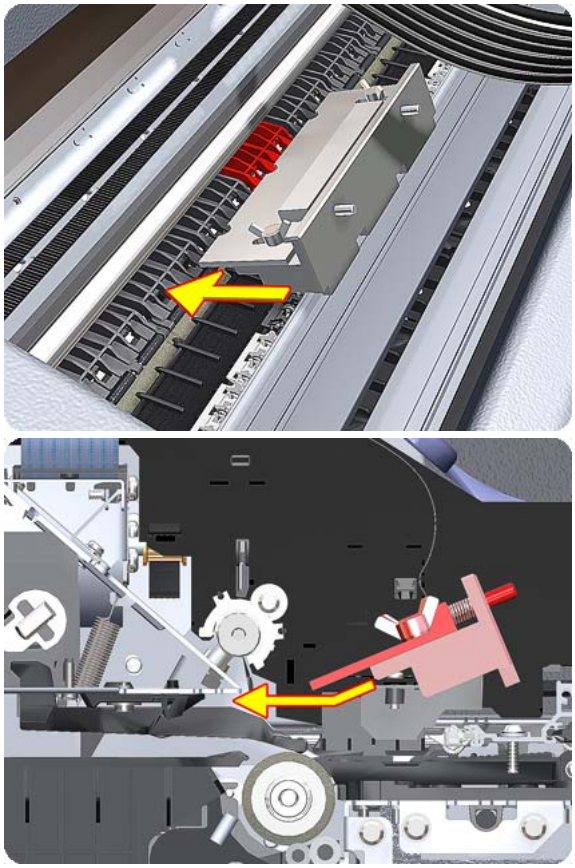

9. Set the Pinchwheel Alignment Tool on the print platen. The tool should fit as shown below.

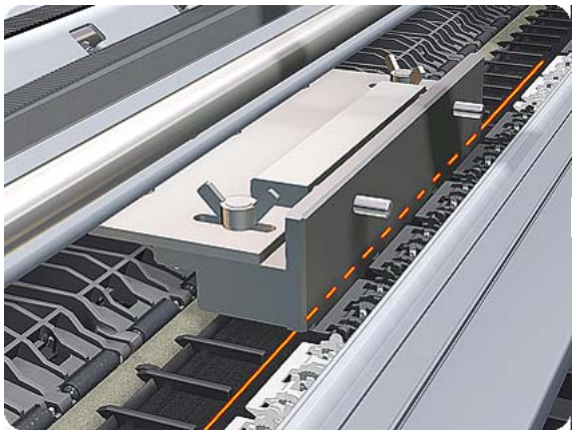

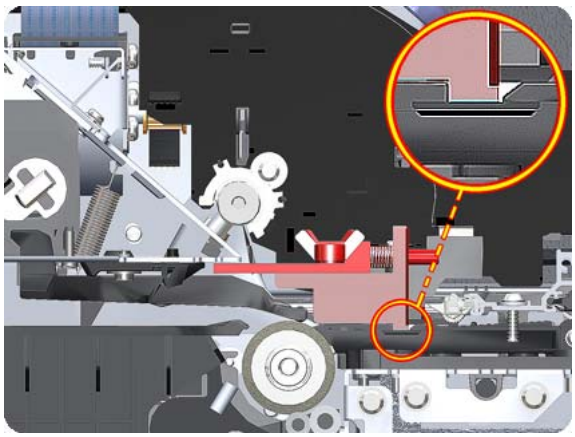

10. Loosen the wing nuts on the Pinchwheel Alignment Tool.

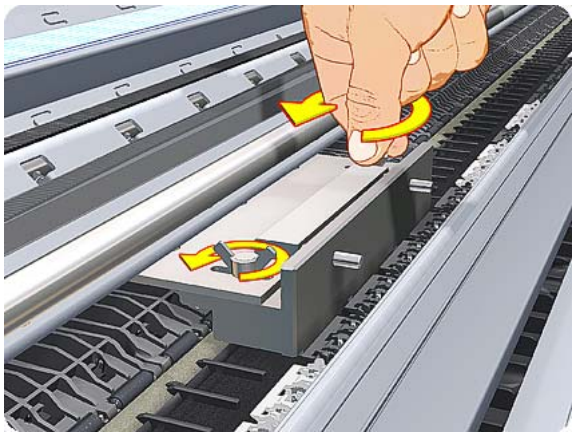

11. Allow the Pinchwheel Alignment Tool to expand. Make sure that the tool is fully expanded.

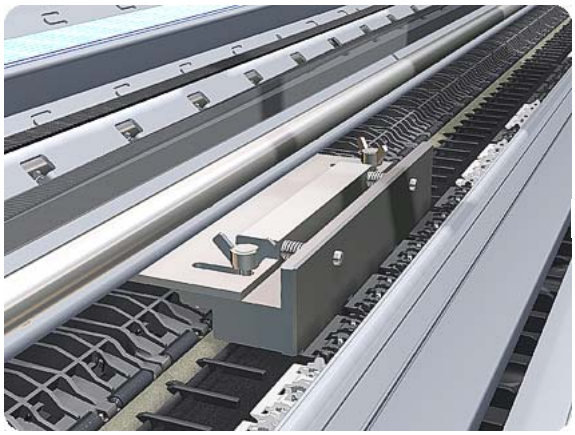

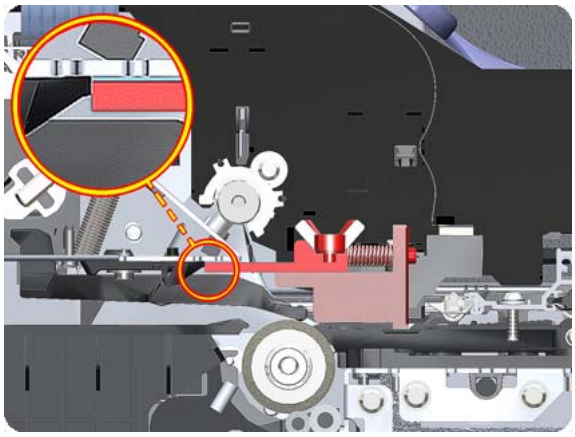

12. When the Pinchwheel Alignment Tool is fully expanded, the Pinchwheel Assembly is properly aligned.

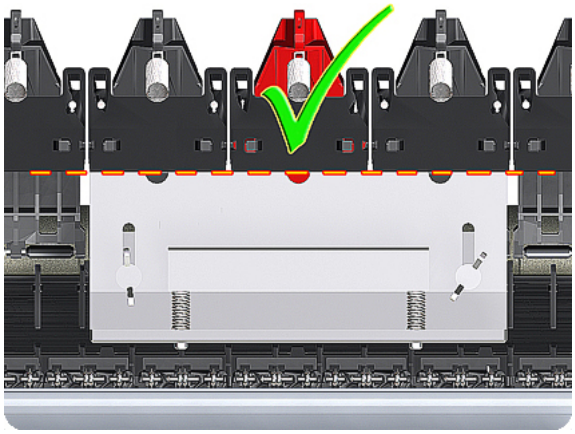

13. Fully tighten the two T-15 attachment screws that secure the Pinchwheel Assembly to the printer.

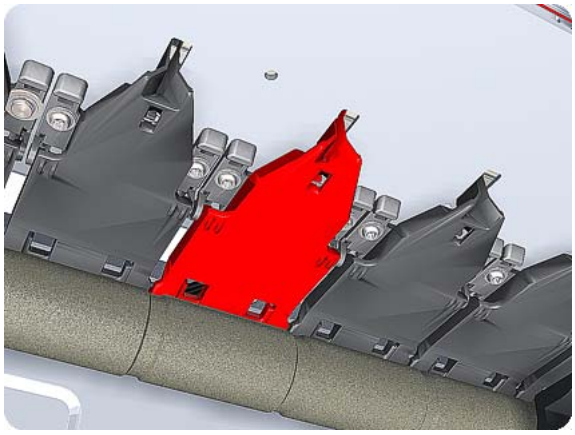

14. Collapse the Pinchwheel Alignment Tool to remove it.

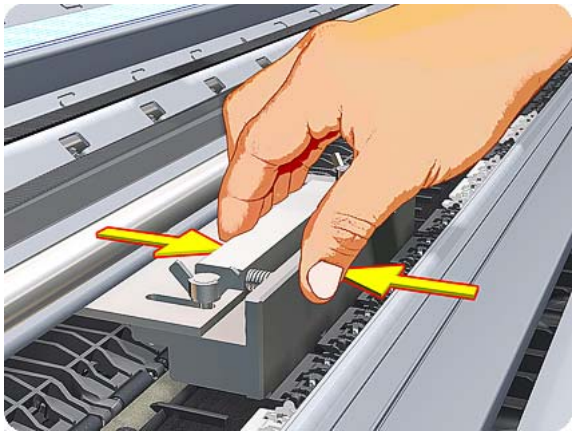

15. Remove the Pinchwheel Alignment Tool from the printer.

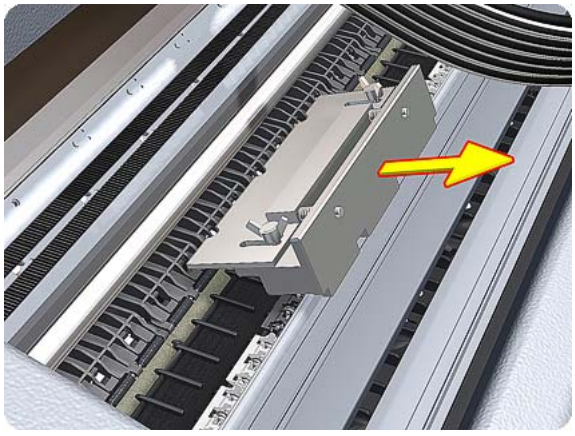

NOTE: When you finish installing or replacing this component, you must perform the necessary Service Calibrations. To find which calibrations you must perform, see Service Calibration Guide to Removal and Installation on page 184.

Print Zone Overdrive

Removal

The Print Zone Overdrive is in two sections (left and right). This procedure describes the removal of both sections. If you want to remove only one of the sections, skip the steps for the other section.

1. Switch off the printer and remove the power cable.
2. Remove the Starwheel Assembly on page 375.
3. Remove one T-8 screw that secures the left clamp of the Print Zone Overdrive to the Platen.

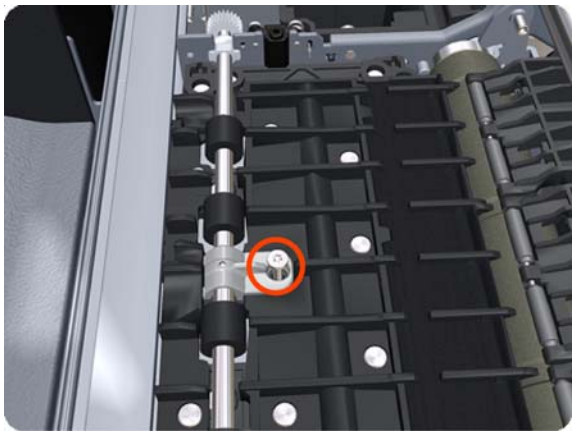

4. Lift attachment clamp vertically to release it from the Platen.

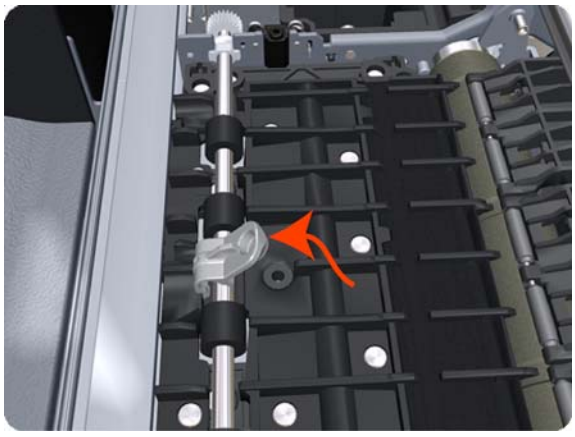

5. Remove the clamp.

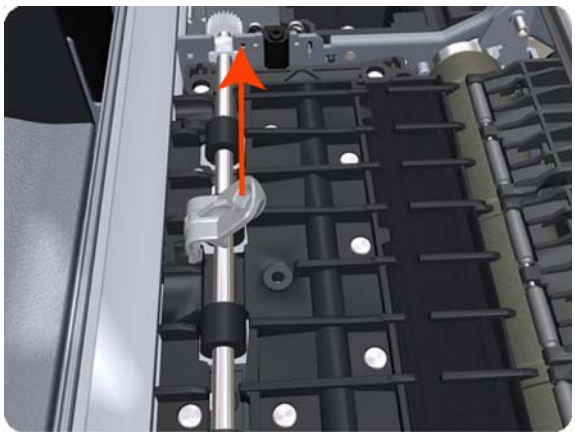

6. Repeat the three preceding steps to remove the remaining five attachment clamps.

7. Use a flat-bladed screwdriver to unclip the left Print Zone Overdrive retaining clip and rotate the clip vertically.

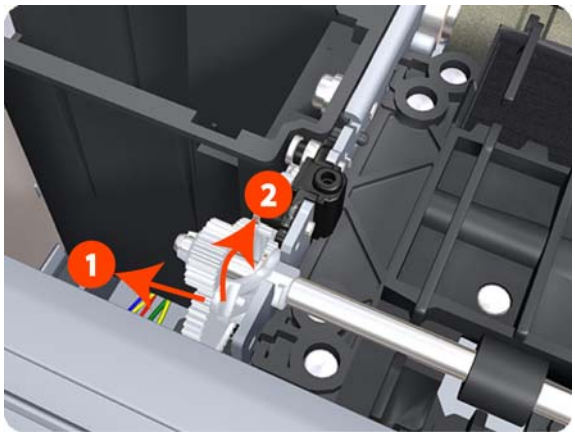

8. Carefully lift the left Print Zone Overdrive enough (10 mm) so you can slide it to the left.

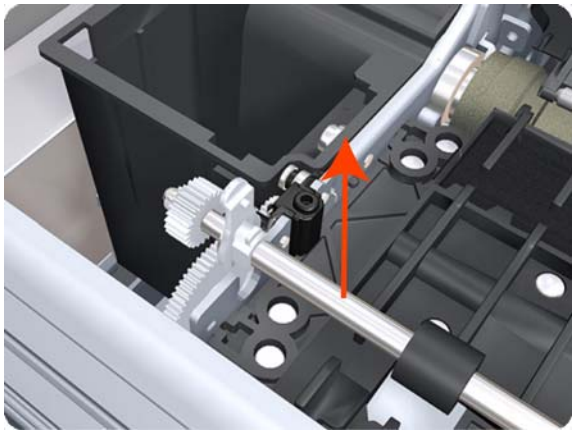

9. Slide the left Print Zone Overdrive to the left disengage the center coupling.

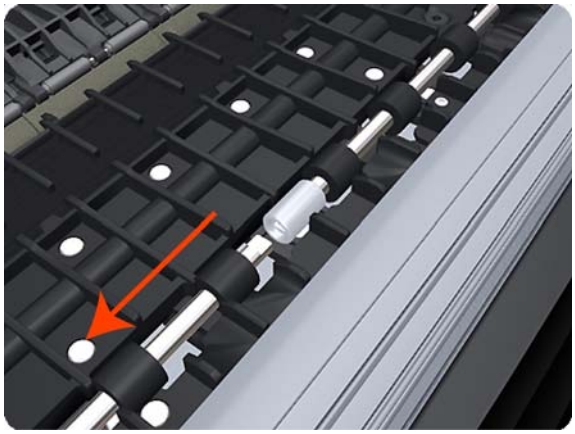

10. Carefully lift the left Print Zone Overdrive out of the printer.

11. Remove the center coupling.

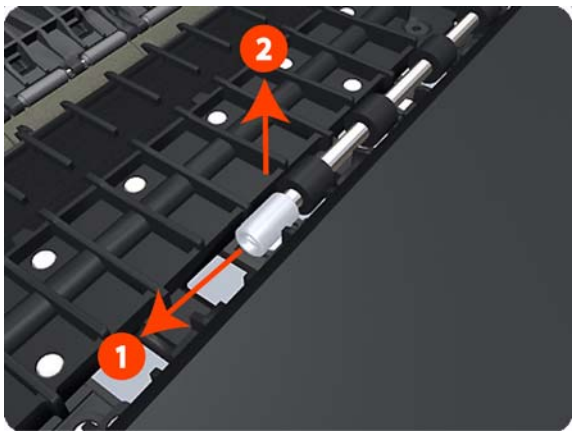

12. Use a flat-bladed screwdriver to unclip the left Print Zone Overdrive retaining clip and rotate the clip vertically.

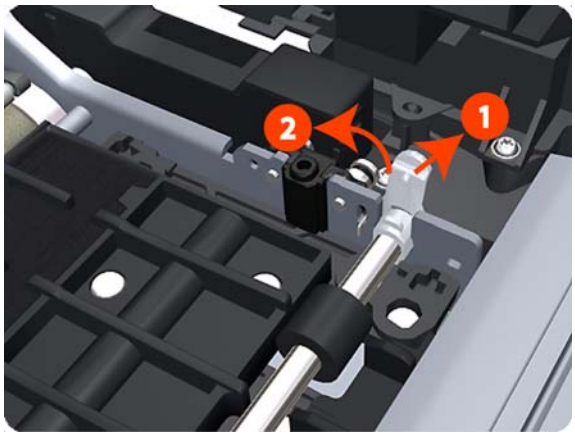

13. Carefully lift the right Print Zone Overdrive out of the printer.

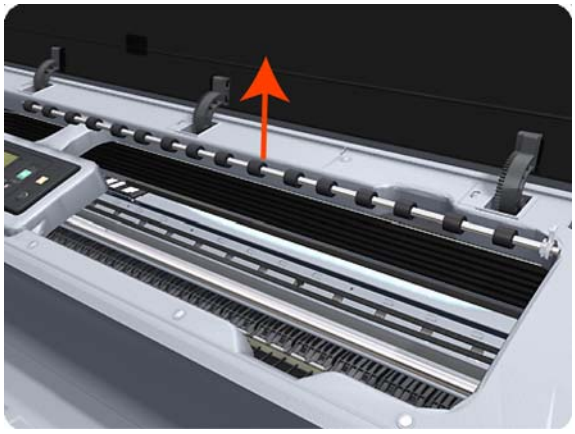

NOTE: When you finish installing or replacing this component, you must perform the necessary Service Calibrations. To find which calibrations you must perform, see Service Calibration Guide to Removal and Installation on page 184.

PSU

1. Remove the EE Box on page 253.
2. Unscrew a series of screws as shown.

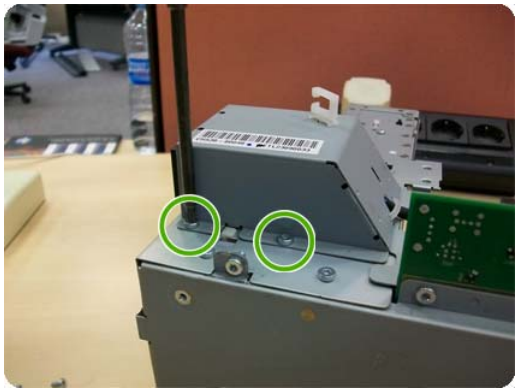
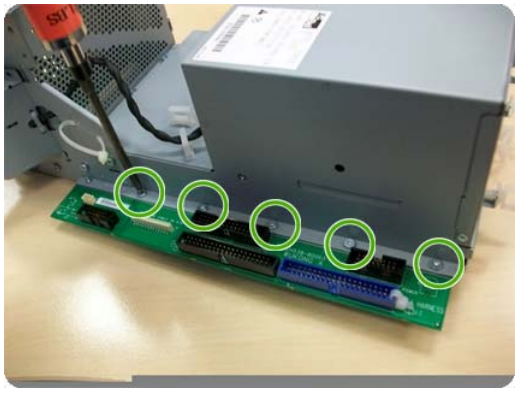
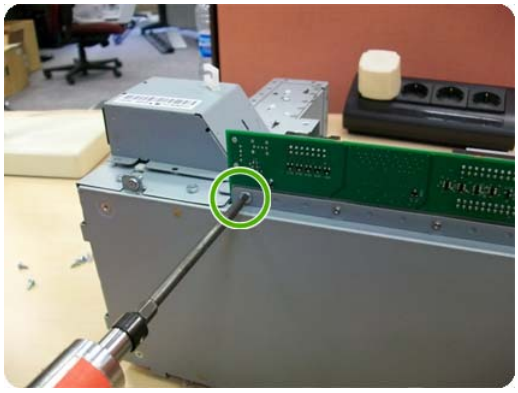
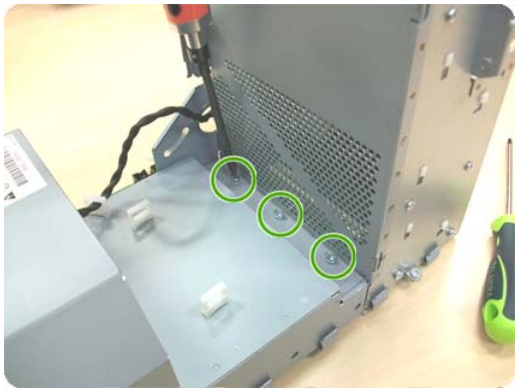

3. Remove the PSU module from the EE box base.

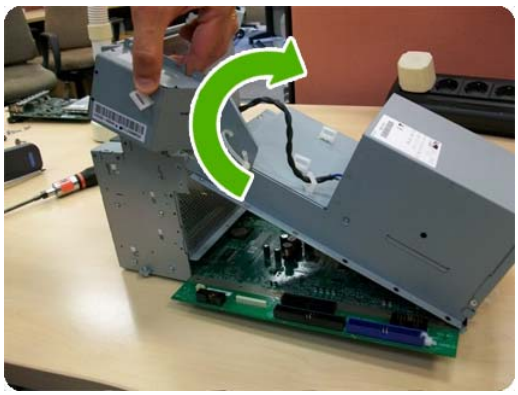

4. Disconnect cable and hooks.

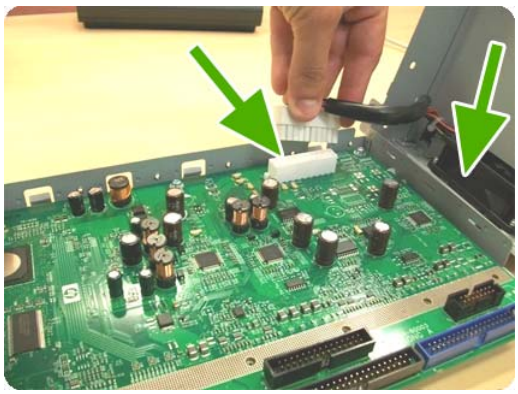

5. The PSU module has now been removed from the printer.

Real-time Clock Battery

Removal and installation

1. Turn the printer off and unplug the cable. Unplug any network or USB cables.
2. Remove the screws that attach the formatter to the printer with your fingers, or with the help of a flat screwdriver, and remove the formatter.
3. Locate the round, flat battery in the formatter.
4. Push the battery slightly to one side and then pull it up. A little force may be required.
5. Insert the new battery by pressing it down.
6. Insert the formatter into the printer by pressing it down, and tighten the screws.
7. Reconnect the cables and turn the printer on.

Roll Cover Bumpers, Lower

Removal and installation

1. Remove the lower roll cover.
2. Identify the bumpers at the rear of the printer.

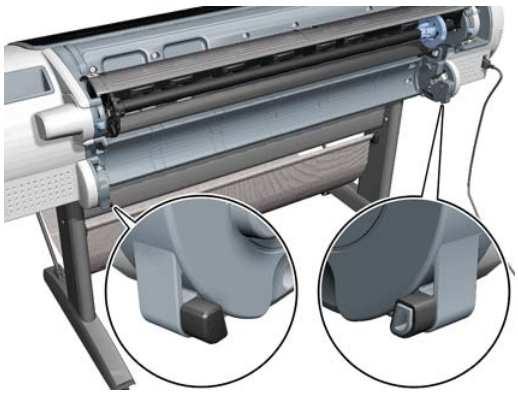

3. Use a screwdriver to lever off the bumper.

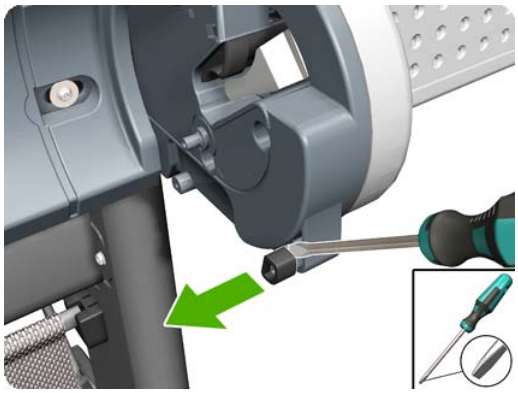

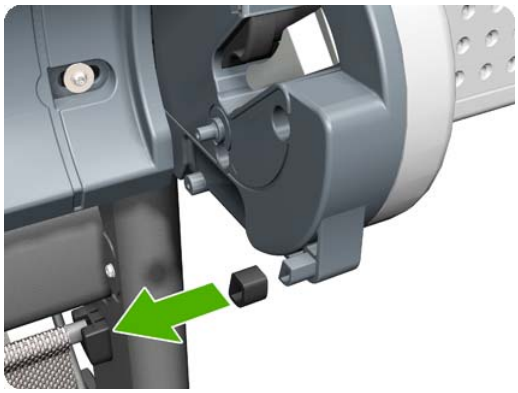

4. Remove the other bumper in the same way.

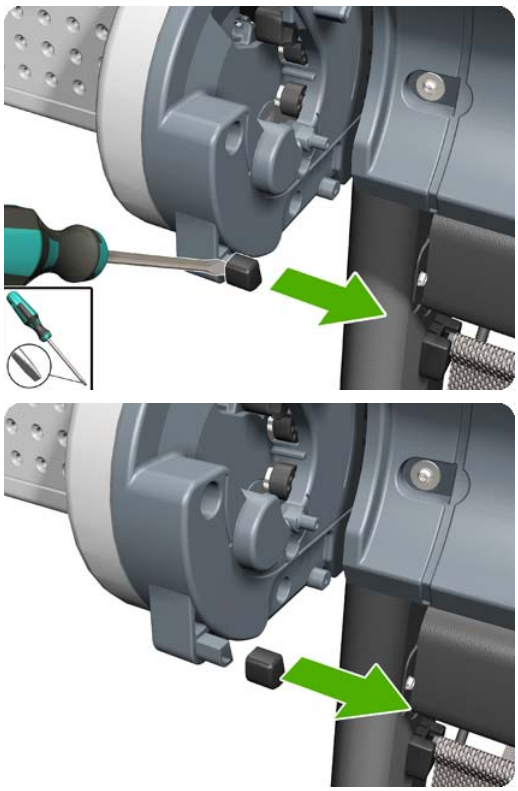

5. Locate the new bumpers.

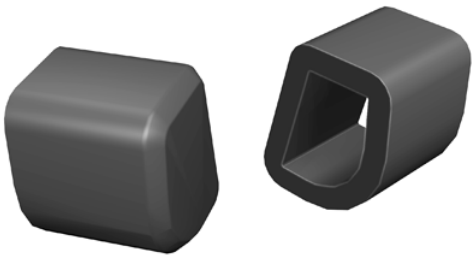

6. Fit the new bumpers into place.

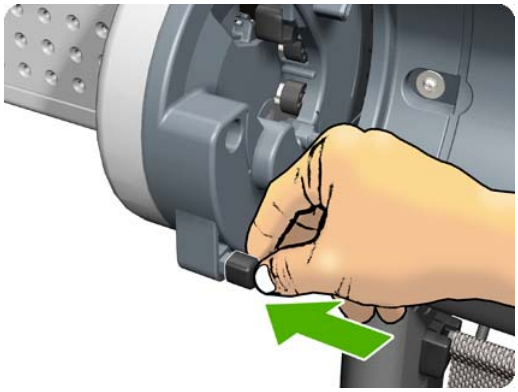

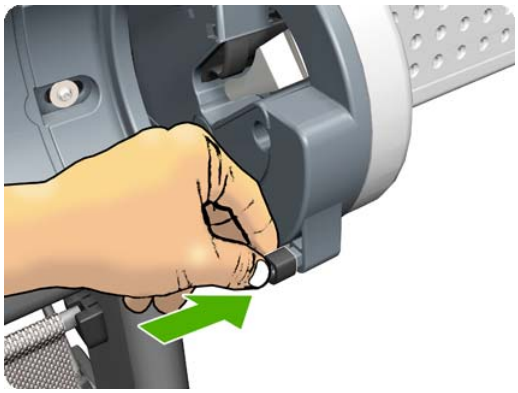

7. Replace the lower roll cover.

Roll Cover Bumpers, Upper

These parts can be replaced by customers who have the appropriate flier.

Removal and installation

1. Identify the bumpers at the rear of the printer.

2. Use a screwdriver to lever off the bumper.

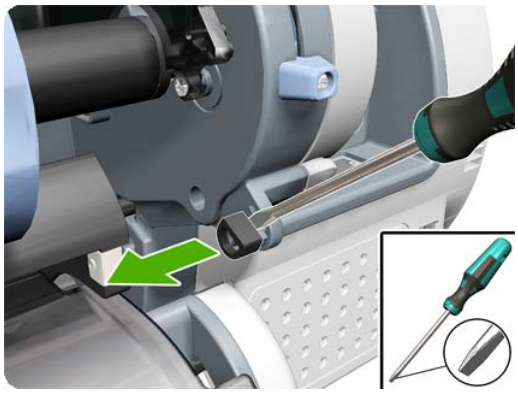

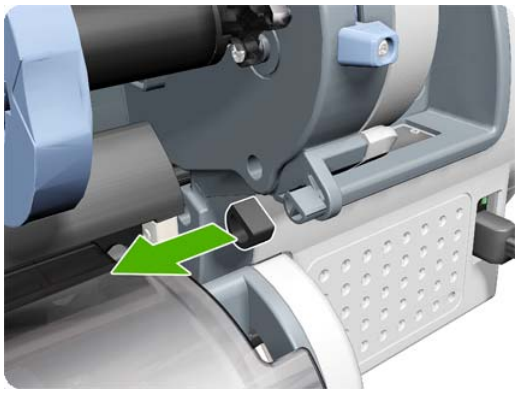

3. Remove the other bumper in the same way.

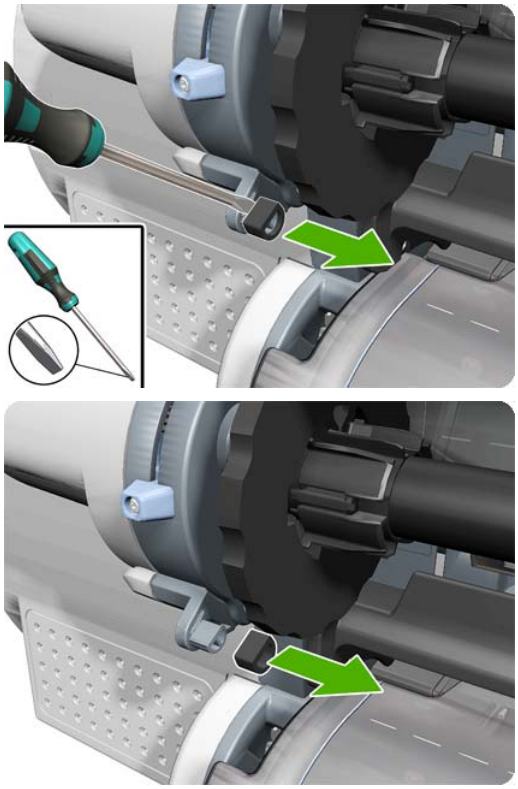

4. Locate the new bumpers.

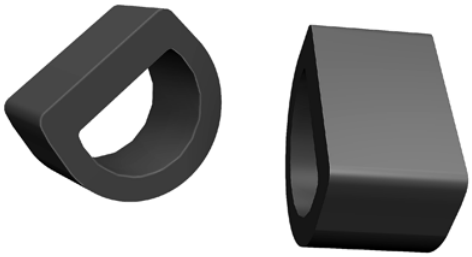

5. Fit the new bumpers into place.

Roll Cover, Lower (T1200 only)

Removal

1. Open the lower roll cover.

2. Remove the spindle.

3. Remove the screw connecting the roll cover to the printer on the left.

4. Remove the screw connecting the roll cover to the printer on the right.

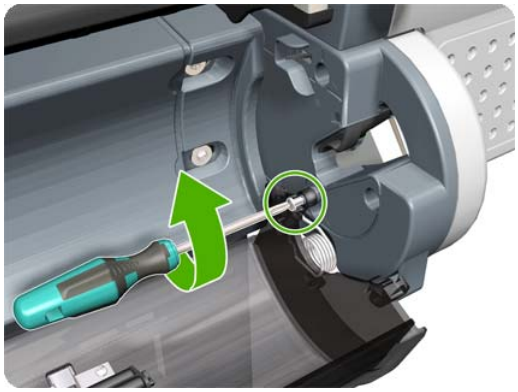

5. Detach the roll cover from the printer on the left-hand side.

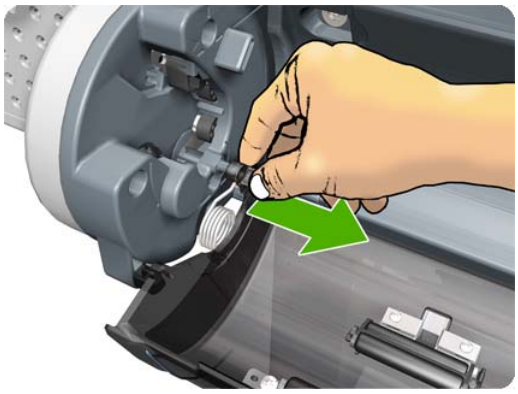

6. Leave the roll cover hanging from the bi-stable spring.

7. Detach the roll cover from the printer on the right-hand side.

8. Leave the roll cover hanging from the bi-stable spring.

9. Both ends of the roll cover are now connected to the printer only by the bi-stable springs.

10. Hold the roll cover with one hand while unscrewing the bi-stable spring from the printer.

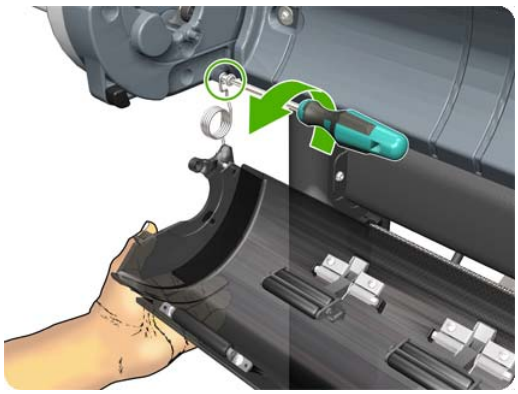

11. Leave one end of the roll cover resting on the floor.

12. Hold the roll cover with one hand while unscrewing the other bi-stable spring from the printer.

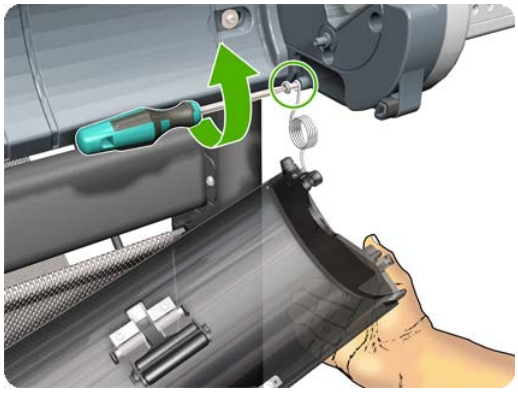

Roll Cover, Upper

Removal

1. Open the Upper Roll Cover.

2. Remove the screw on the Roll Cover's left side that attaches to the Upper Left Roll Support.

3. Remove the screw on the Roll Cover's right side that attaches to the Upper Right Roll Support.

4. Remove the Roll Cover hinge from the Roll Left Support Pin.

5. Remove the Roll Cover hinge from the Roll Right Support Pin.

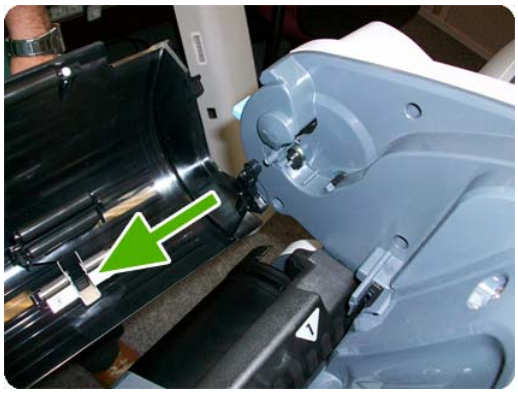

Roll Guide, Left

Removal

1. Switch off the printer and remove the power cable.
2. Remove the Spindle on page 373.
3. Remove the Roll Cover, Lower (T1200 only) on page 346.
4. Remove the Converger on page 233.
5. Remove the Cleanout on page 231.
6. Remove five T-15 screws that secure the Left Roll Guide to the printer.

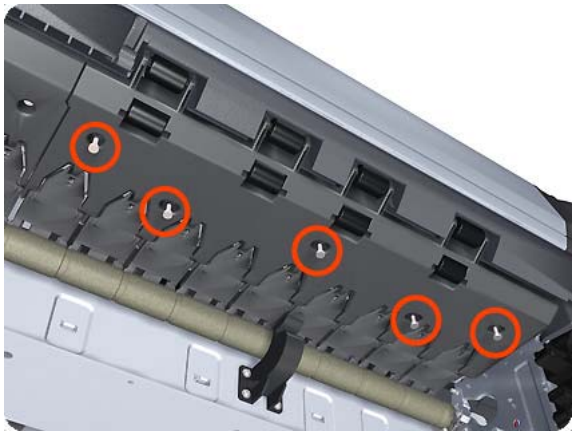

7. Lower the left end and remove the Left Roll Guide from the printer.

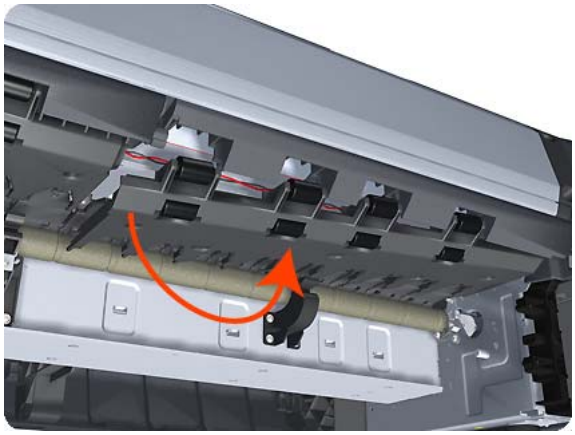

NOTE: When you finish installing or replacing this component, you must perform the necessary Service Calibrations. To find which calibrations you must perform, see Service Calibration Guide to Removal and Installation on page 184.

Roll Guide, Right

Removal

1. Switch off the printer and remove the power cable.
2. Remove the Roll Guide, Left on page 352.
3. Remove seven T-15 screws that secure the Right Roll Guide to the printer.

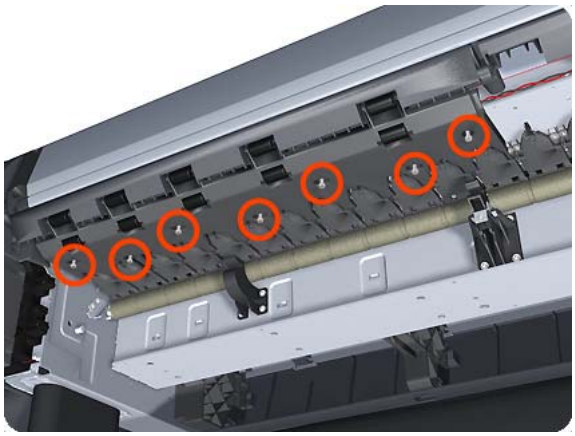

4. Lower the right end and remove the Right Roll Guide from the printer.

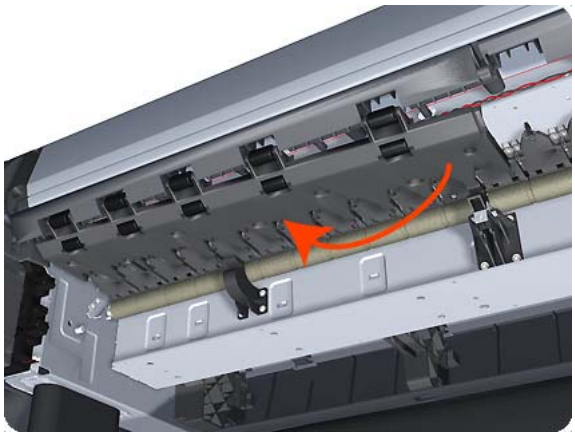

NOTE: When you finish installing or replacing this component, you must perform the necessary Service Calibrations. To find which calibrations you must perform, see Service Calibration Guide to Removal and Installation on page 184.

Roll Support, Lower Left (T1200 only)

Removal

1. Remove the Converger on page 233.
2. Remove the Roll Cover, Lower (T1200 only) on page 346.
3. Remove the Cover, Rear on page 240.
4. Remove the Roll Support, Upper Left on page 359.
5. Remove screws as shown.

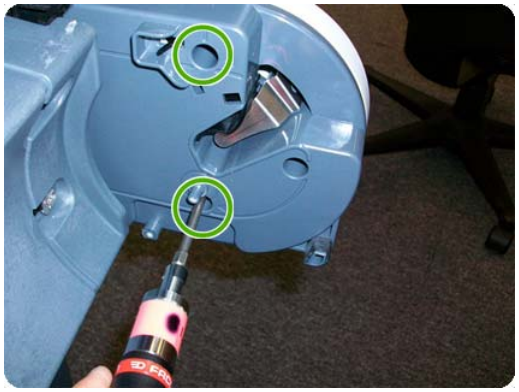

6. Unplug the Lower Left Roll Support, taking care not to damage the cables.

7. Disconnect the cable connector as shown.

Roll Support, Lower Right (T1200 only)

Removal

1. Remove the Cover, Right on page 241.
2. Remove the Roll Cover, Lower (T1200 only) on page 346.
3. Unplug the motor encoder cable.

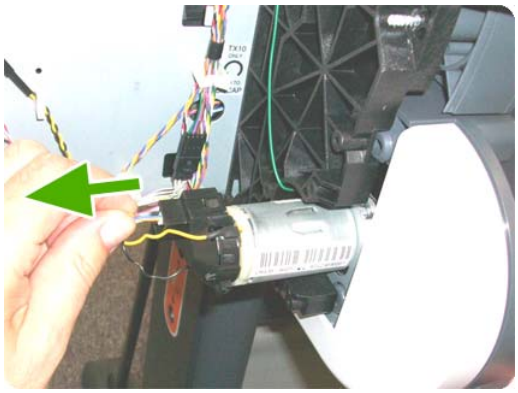

4. Unplug the motor cable.

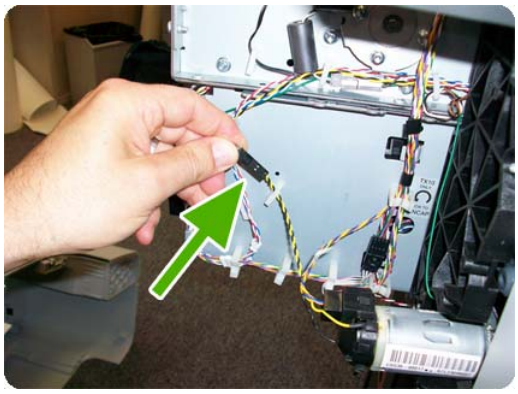

5. Remove the screw of the grounding cable.

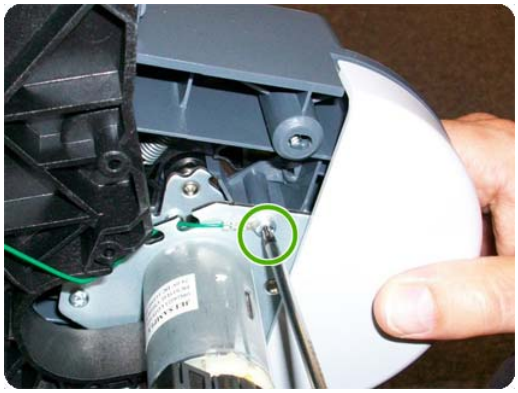

6. Remove two screws as shown.

Roll Support Sensor, Lower Left (T1200 only)

Removal

1. Remove the Roll Support, Lower Left (T1200 only) on page 354.
2. Unscrew the screw as shown.

3. Remove the cable.

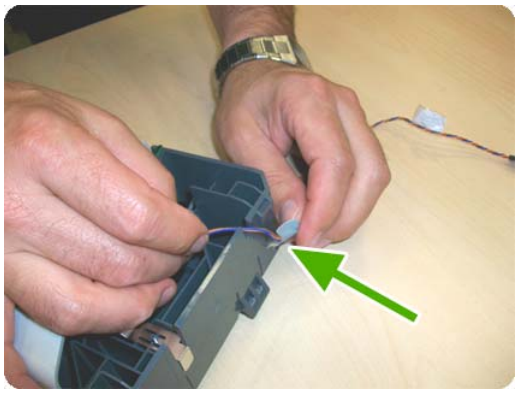

4. The sensor has been removed.

Roll Support Sensor, Upper Left (T1200 only)

Removal

1. Remove the Roll Support, Upper Left on page 359.
2. Unscrew the screw as shown.

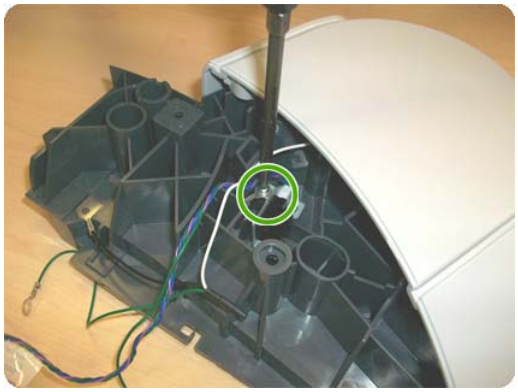

3. Remove the sensor.

Roll Support, Upper Left

Removal

1. Remove the Roll Cover, Upper on page 350.
2. Remove the Converger on page 233.
3. Remove the Cover, Rear on page 240.
4. Remove screws as shown.

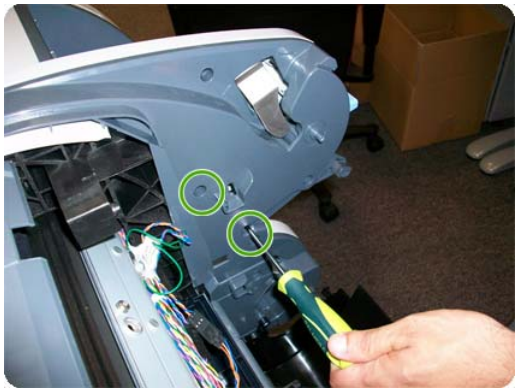

5. Unplug the Upper Left Roll Support, taking care not to damage the cables. Detach all cables from the Roll Support.

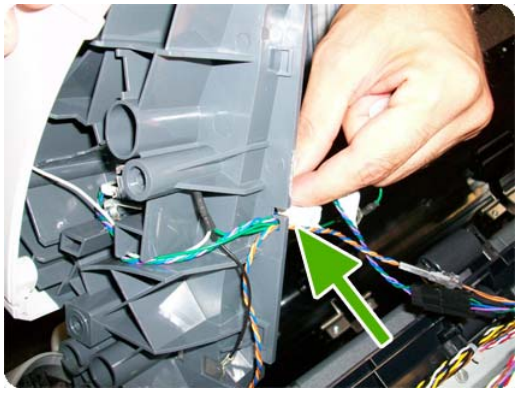

6. Disconnect the cable connector as shown.

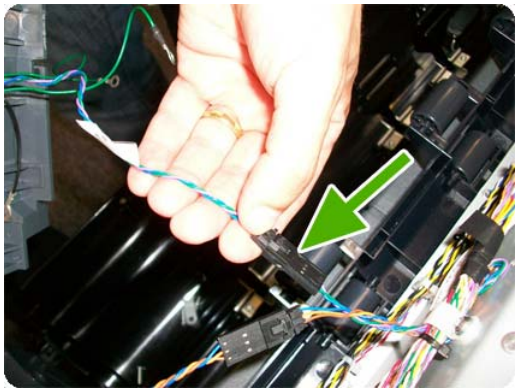

7. Remove the Upper Left Roll Support.

Roll Support, Upper Right

Removal

1. Remove the Converger on page 233.
2. Remove the Roll Cover, Upper on page 350.
3. Remove the Cover, Rear on page 240.
4. Unscrew screws as shown.

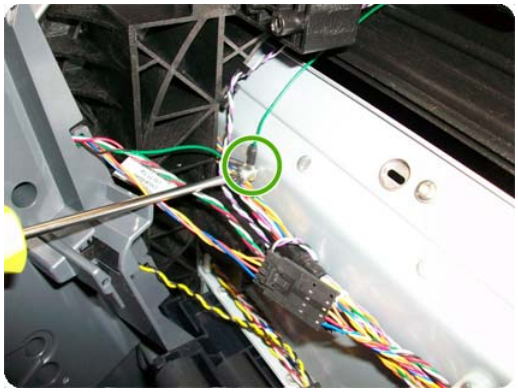

5. Unplug the Upper Right Roll Support, taking care not to damage the cables. Detach all cables from the Roll Support.

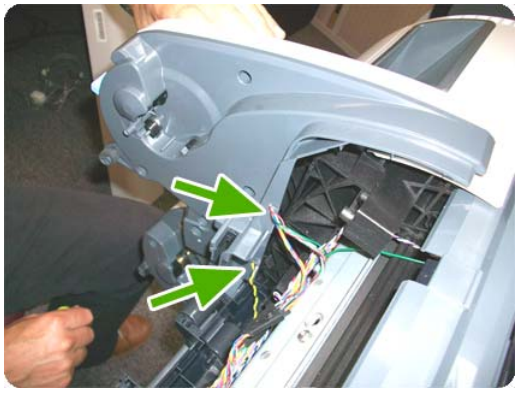

6. Disconnect the cable connector as shown.

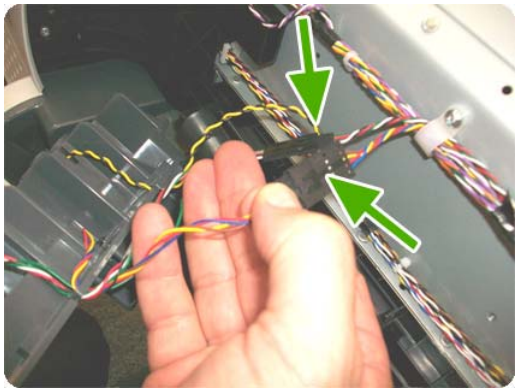

7. Remove the Upper Right Roll Support.

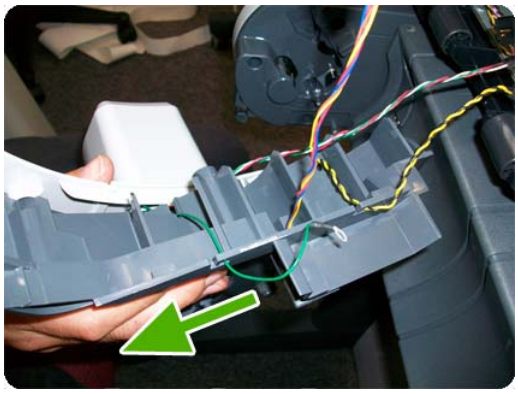

Scan-axis Motor

Removal

1. Switch off the printer and remove the power cable.
2. Remove the Cover, Right on page 241.
3. Remove the Cover, Left on page 236.
4. Loosen the T-10 uncapping screw sufficiently so you can move the Carriage Assembly manually.

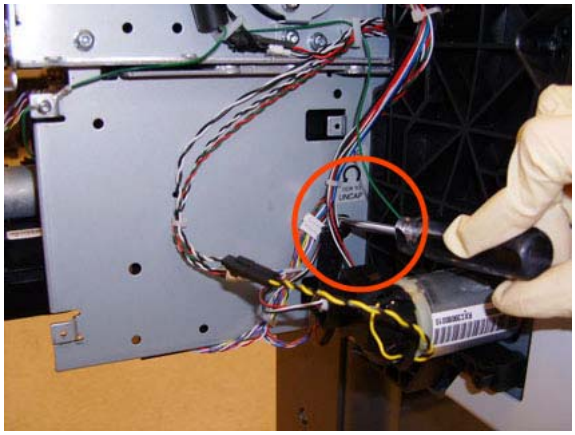

5. Push the Carriage Assembly into the print path.

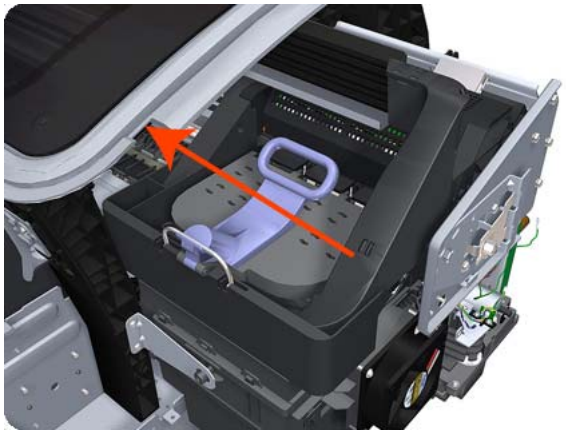

6. Loosen the T-20 screw Belt Tensioner to the printer to remove the tension from the belt.

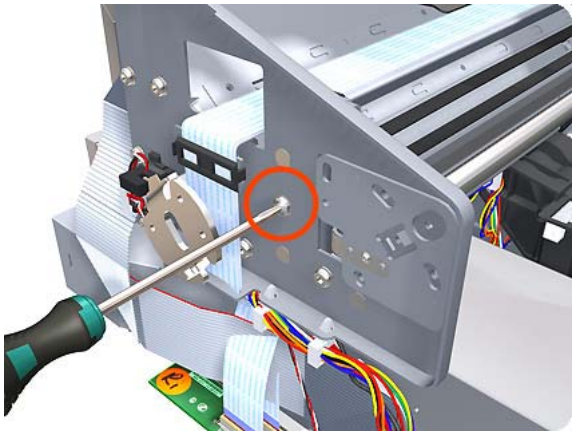

7. Leave the Belt Tensioner in place.

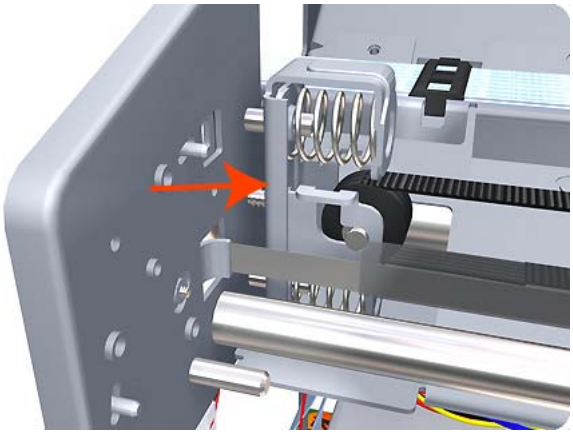

8. Remove the Belt Assembly from the drive wheel of the Scan-Axis Motor.

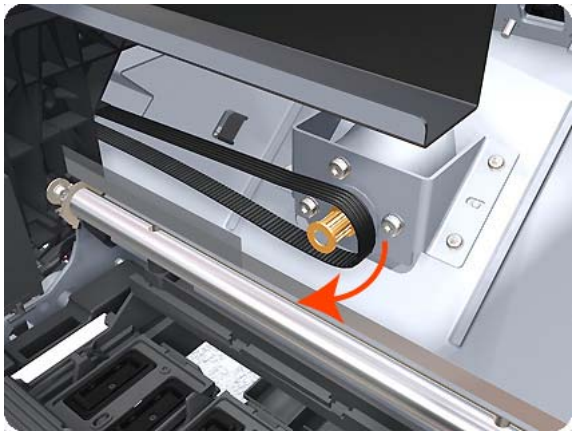

9. Remove three T-20 screws that secure the Scan-Axis Motor to the printer.

10. Unroute the Scan-Axis Motor supply cable from the cable clamp.

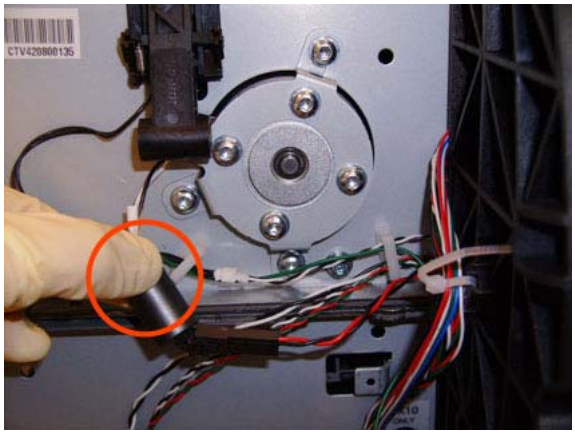

11. Disconnect the Scan-Axis Motor supply connector from the L1 Harness.

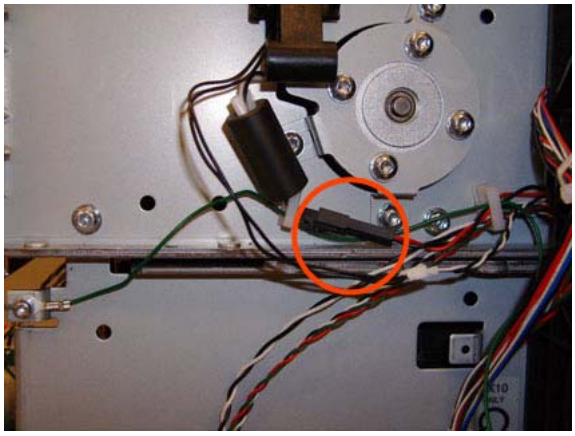

12. Remove three T-20 screws that secure the Scan-Axis Motor to the printer.

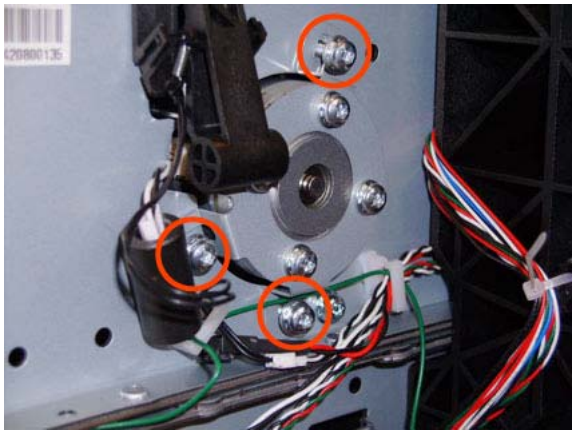

13. Carefully pull the Scan-Axis Motor out of the printer (10 mm) until you can rotate it approximately 30 degrees counterclockwise.

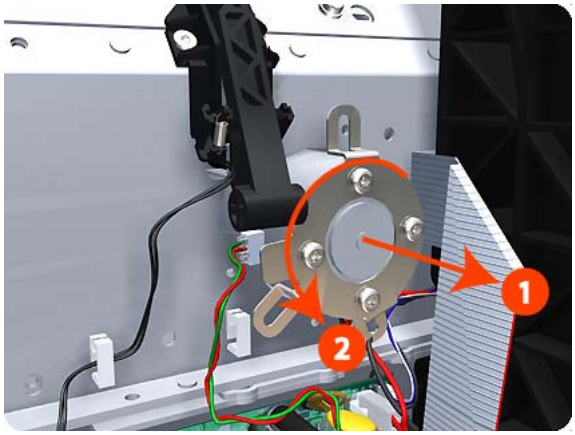

14. Remove the Scan-Axis Motor from the printer.

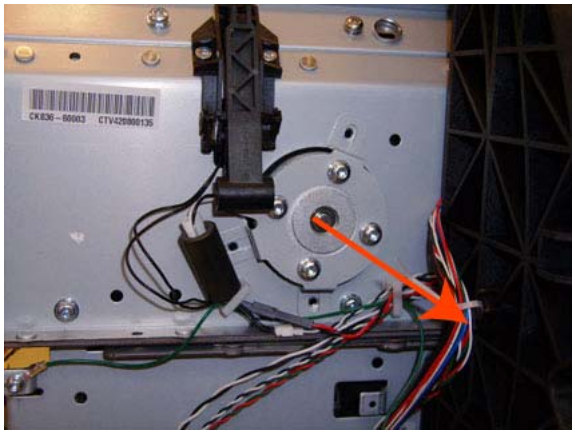

NOTE: When you finish installing or replacing this component, you must perform the necessary Service Calibrations. To find which calibrations you must perform, see Service Calibration Guide to Removal and Installation on page 184.

Service Station

Removal

1. Switch off the printer and remove the power cable.
2. Remove the Cover, Right on page 241.
3. Disconnect the two lower connectors.

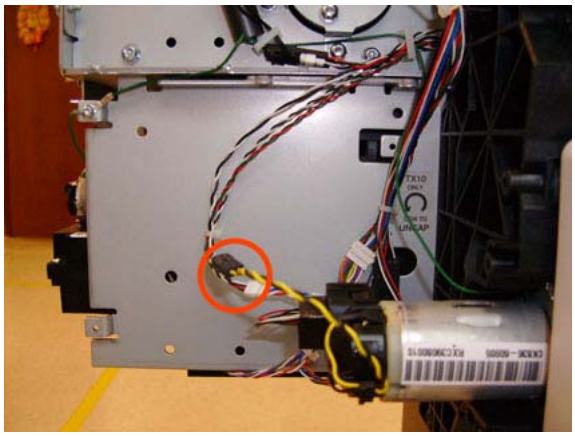

4. Unsnap the clamp from the bottom of the metal sideplate.

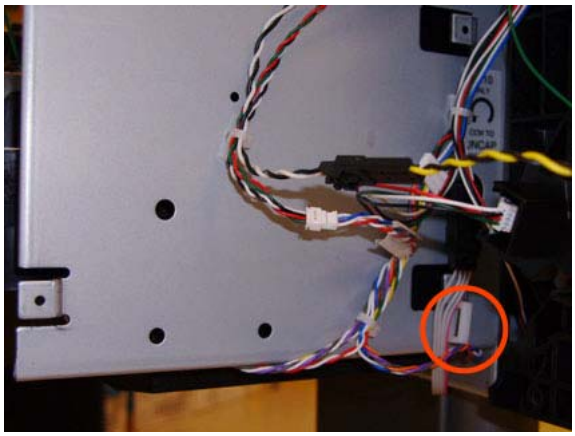

5. Remove the grounding cable attachment T-10 screw from the metal sideplate.

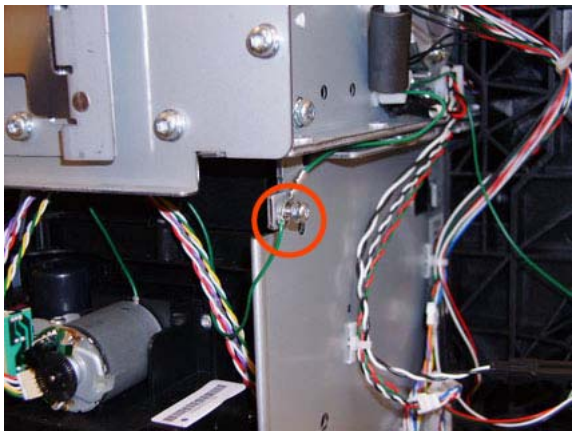

6. Disconnect connector from the Primer Motor and Primer Sensor.

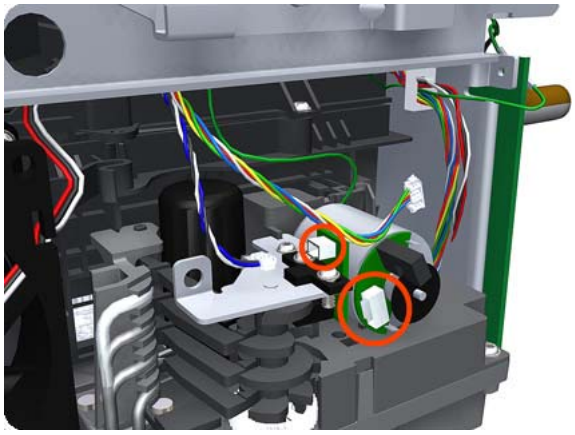

7. Unroute the cables disconnected in the previous two steps from the two cable clamps.

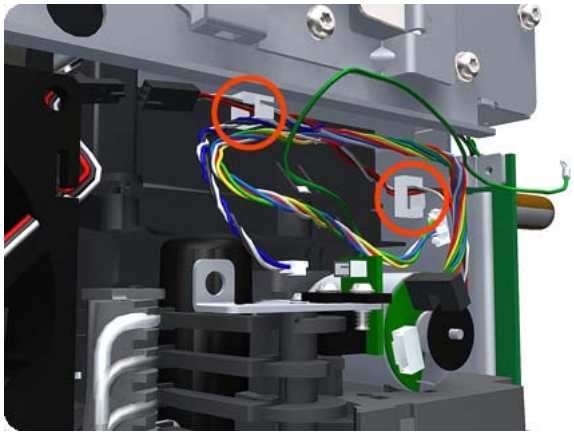

8. Loosen the T-10 uncapping screw enough that you can move the Carriage Assembly manually.

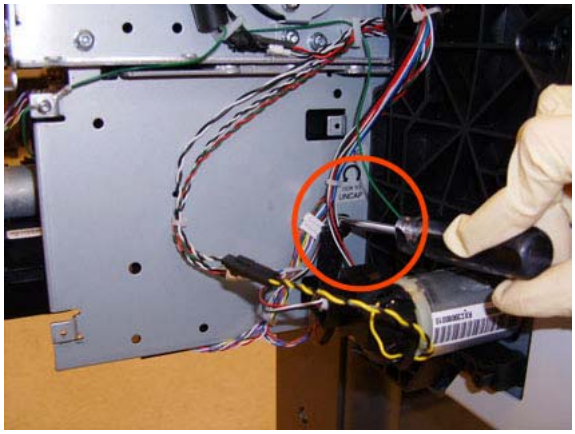

9. Push the Carriage Assembly into the print path to gain access to two T-10 screws that secure the Service Station to the Carriage Rail.

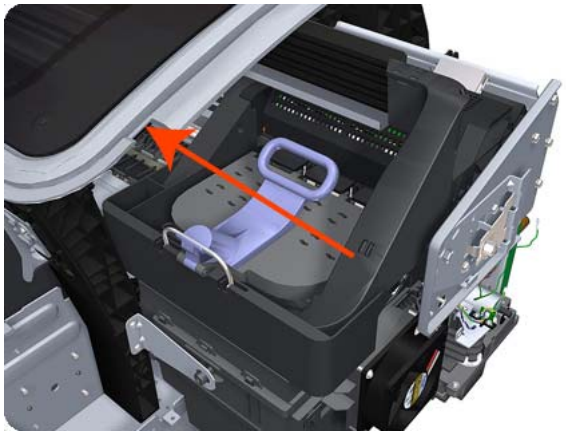

10. Remove the two Allen T-8 screws that secure the Service Station to the Carriage Rail. To avoid damaging the Encoder Strip, you can use a standard screwdriver.

NOTE: Support the Service Station so that it does not fall when you remove the attachment screws.

11. Unclip the clip to release the Service Station from the printer.

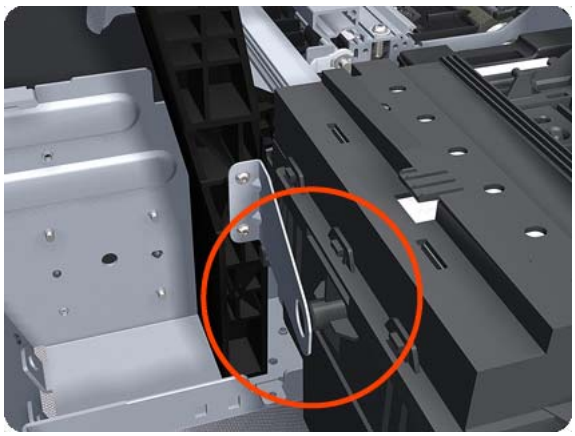

12. Lower the Service Station until you can slide it carefully from the printer.

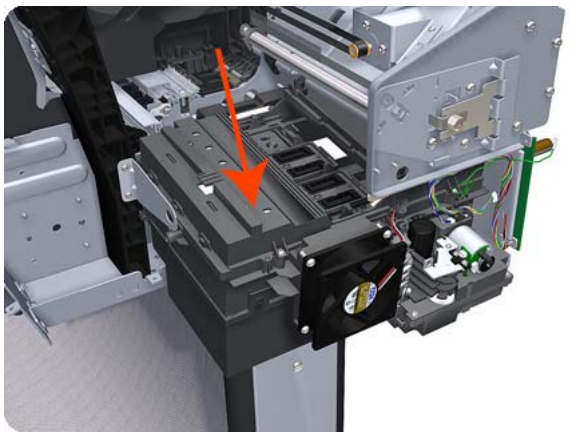

13. Carefully slide the Service Station from the printer.

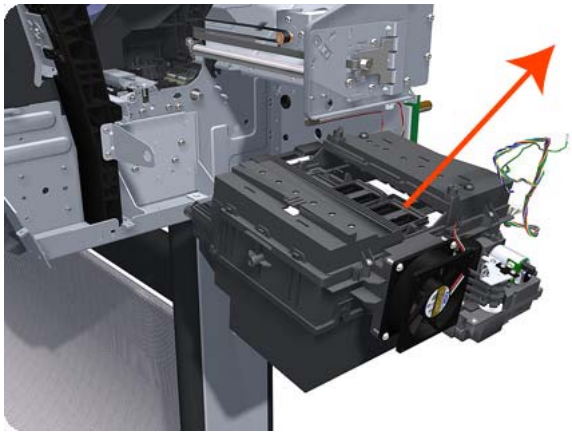

NOTE: When you finish installing or replacing this component, you must perform the necessary Service Calibrations. To find which calibrations you must perform, see Service Calibration Guide to Removal and Installation on page 184.

Single-sheet Sensor

Removal

1. Remove the Roll Support, Upper Right on page 361.
2. Disengage the cable.

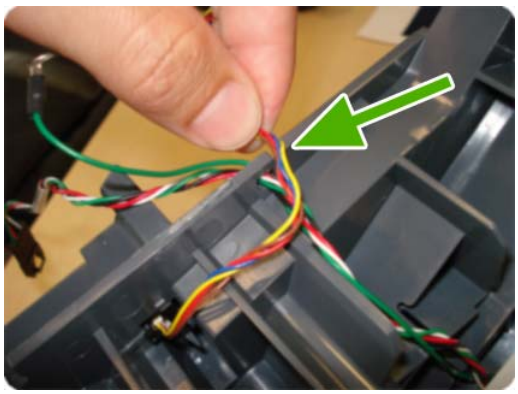

3. Push down the clip that holds the Siva sensor (you can use a screwdriver).

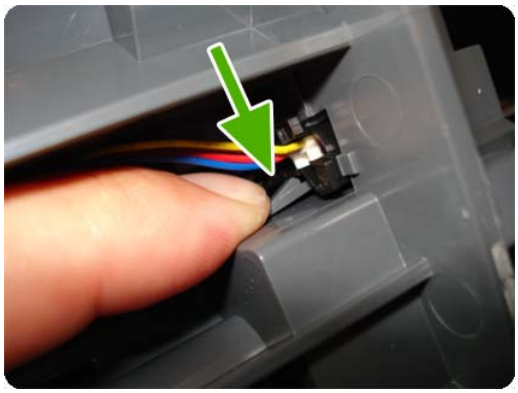

4. Pull out the sensor.

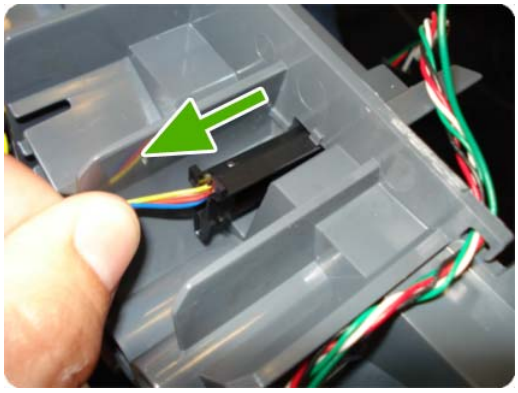

5. The sensor has been removed.

Spindle

Removal

1. Open the roll cover.
2. Remove the black end of the spindle from the printer, then the blue end.

△ **CAUTION:** Be sure to remove the black end first. Removing the blue end first could damage the black end.

CAUTION: Do not insert your fingers into the spindle supports during the removal process.

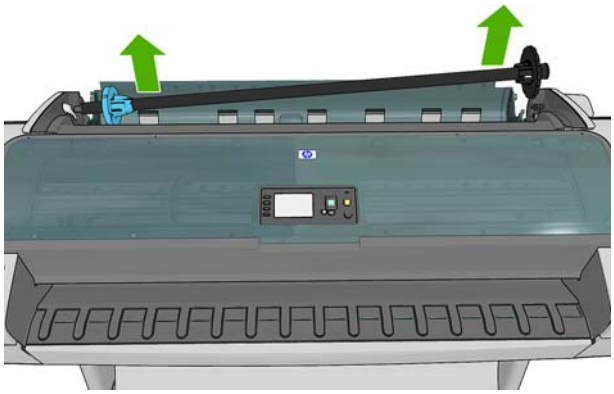

Spittoon, Left

Removal

This procedure describes how to remove the complete Left Spittoon which is necessary to gain access to other components.

NOTE: Switch off the printer and remove the power cable.

1. Remove the Cover, Left on page 236.

2. Remove the Electronics Module Main PCA and PSU on page 256.

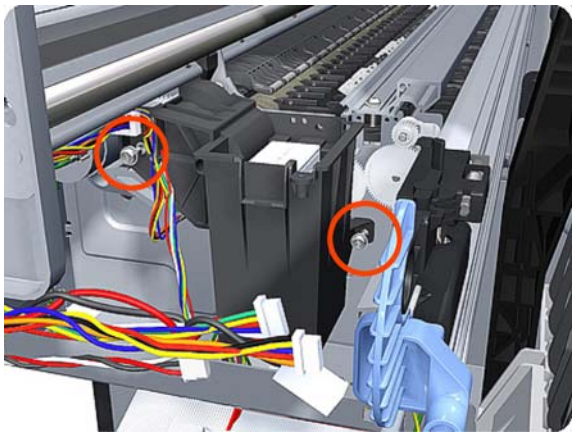

3. Remove two T-20 screws that secure the Left Spittoon to the printer.

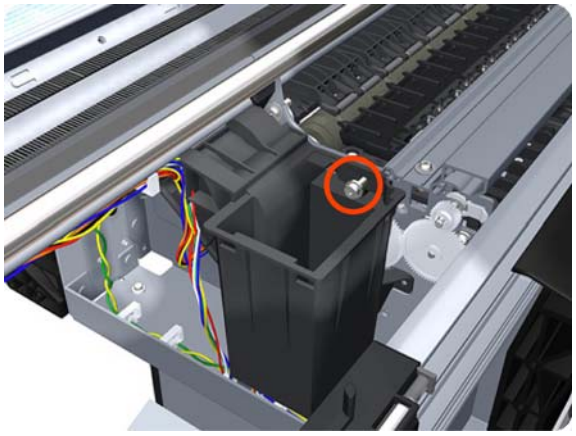

4. Remove one T-8 screw that secures the Left Spittoon to the printer.

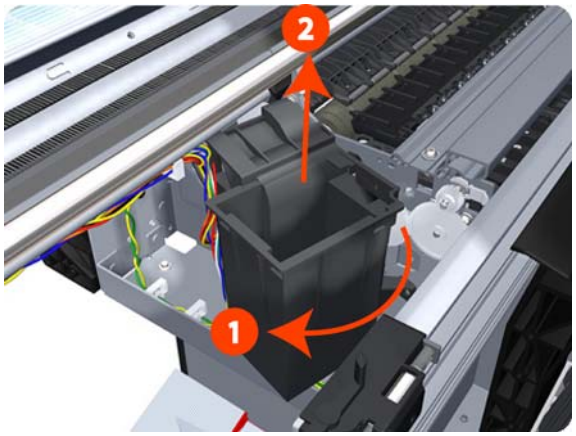

5. Rotate the Left Spittoon clockwise approximately 45 degrees and carefully lift it out of the printer.

Starwheel Assembly

Removal

1. Switch off the printer and remove the power cable.
2. Open the Window.

3. Remove one T-10 screw that secures the Starwheel Assembly to the printer.

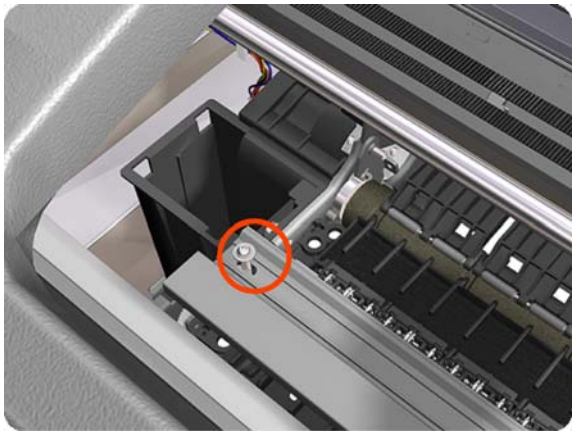

4. Remove another T-10 screw that secures the Starwheel Assembly to the printer.

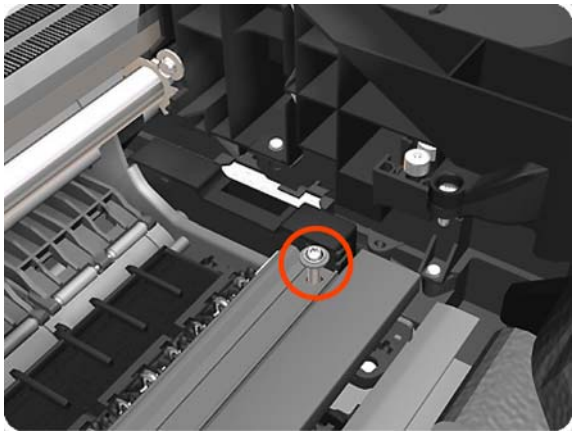

5. Carefully lift the Starwheel Assembly out of the printer.

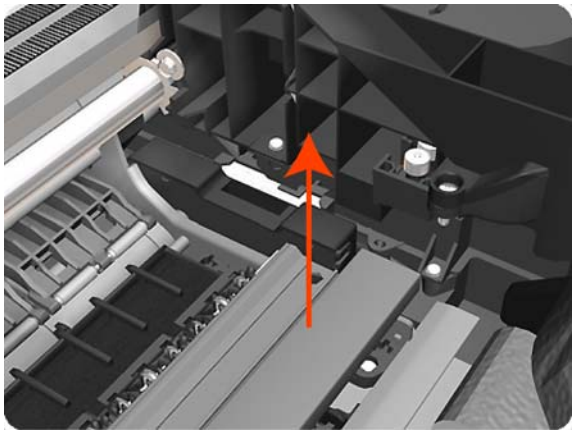

NOTE: When you finish installing or replacing this component, you must perform the necessary Service Calibrations. To find which calibrations you must perform, see Service Calibration Guide to Removal and Installation on page 184.

Starwheel Lifter, Left

Removal

1. Switch off the printer and remove the power cable.
2. Remove the Cover, Front on page 235.
3. Remove the Cover, Left on page 236.
4. Remove the Electronics Module Main PCA and PSU on page 256.
5. Remove the Spittoon, Left on page 374.
6. Remove the Starwheel Assembly on page 375.
7. Remove two T-8 screws that secure the Left Starwheel Lifter to the printer.

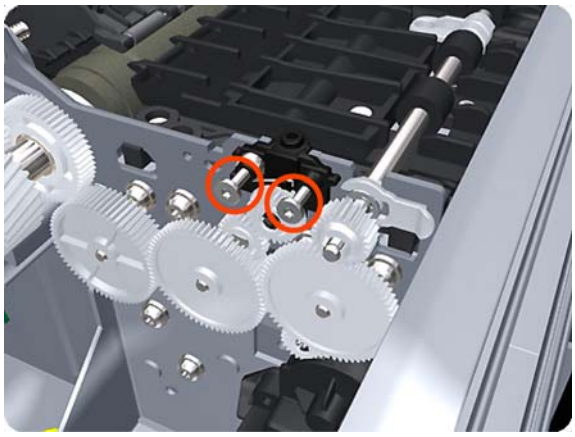

8. Rotate the Left Starwheel Lifter sufficiently to disengage the right attachment lug.

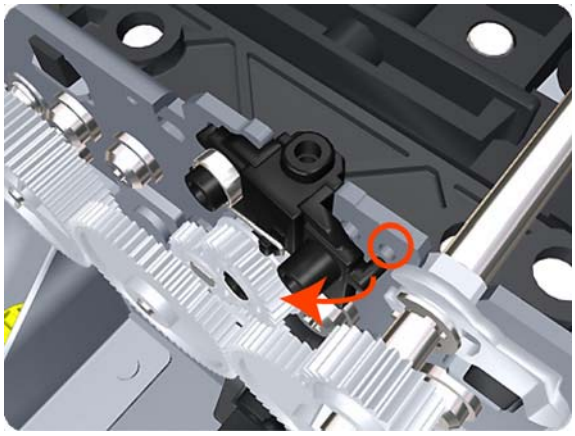

9. Tilt the Left Starwheel Lifter sufficiently to disengage the left attachment lug.

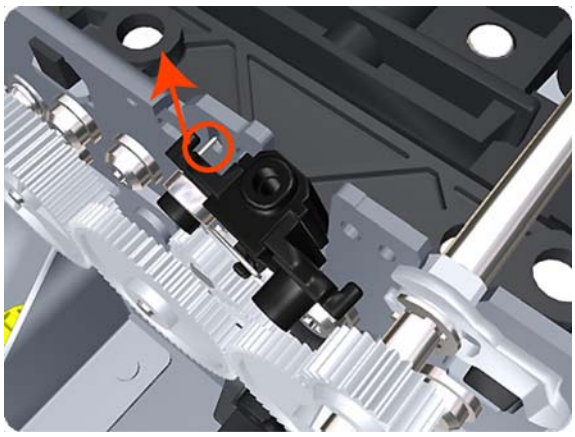

10. Remove the Left Starwheel Lifter from the printer.

NOTE: Do **not** remove the spring from the Left Starwheel Lifter, because it is difficult to reattach.

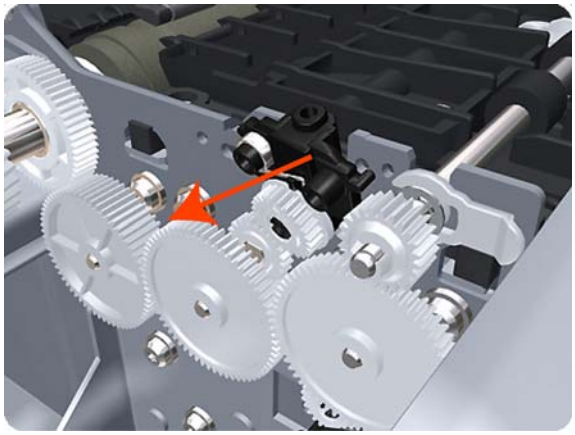

NOTE: When you finish installing or replacing this component, you must perform the necessary Service Calibrations. To find which calibrations you must perform, see Service Calibration Guide to Removal and Installation on page 184.

Starwheel Lifter, Right

Removal

1. Switch off the printer and remove the power cable.
2. Remove the Cover, Right on page 241.
3. Remove the Starwheel Assembly on page 375.
4. Loosen the T-10 uncapping screw sufficiently so you can manually move the Carriage Assembly in step 8.

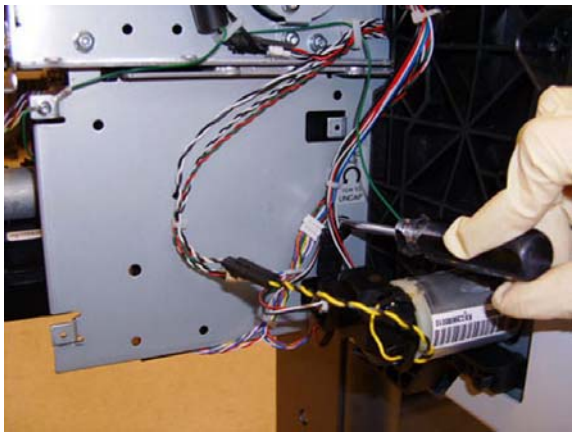

5. Push the Carriage Assembly into the print path.

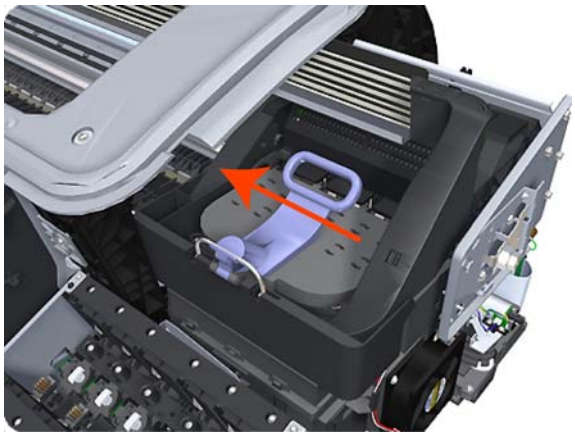

6. Remove one T-10 screw that secures the Drop Detector to the Service Station.

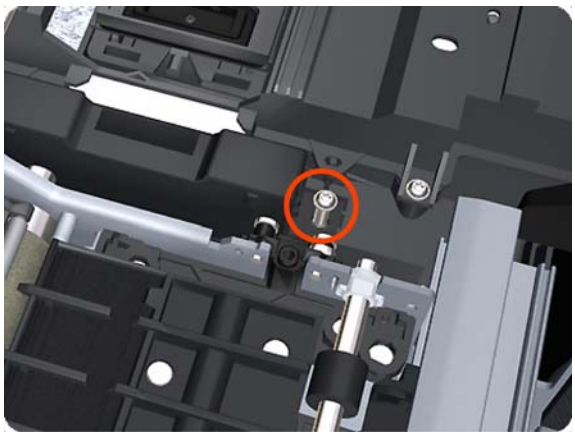

7. Rotate the Drop Detector vertically to gain access to the two screws that secure the Right Starwheel Lifter.

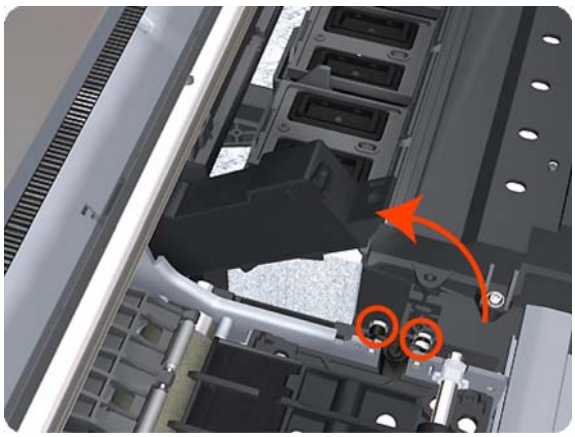

8. Remove two T-8 screws that secure the Right Starwheel Lifter to the printer.

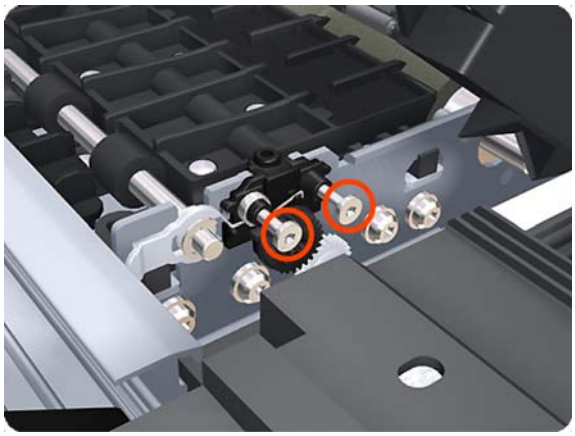

9. Rotate the Right Starwheel Lifter sufficiently to disengage the right attachment lug.

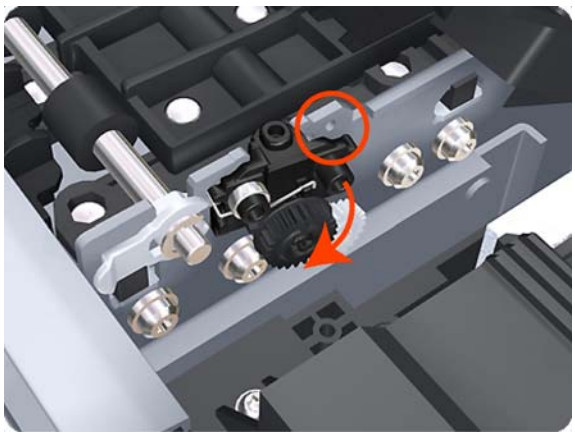

10. Tilt the Right Starwheel Lifter sufficiently to disengage the left attachment lug.

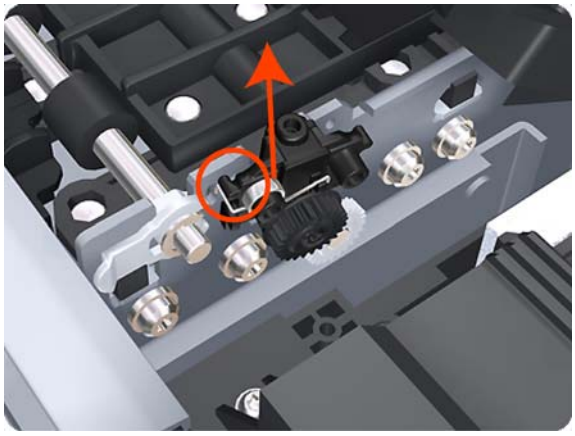

11. Remove the Right Starwheel Lifter from the printer.

NOTE: Do **not** remove the spring from the Right Starwheel Lifter, because it is difficult to reattach.

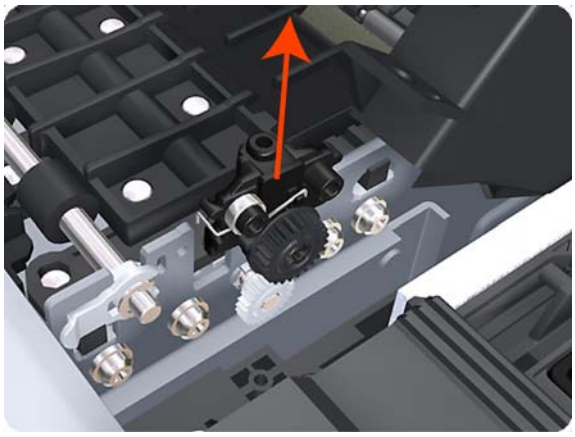

NOTE: When you finish installing or replacing this component, you must perform the necessary Service Calibrations. To find which calibrations you must perform, see Service Calibration Guide to Removal and Installation on page 184.

Starwheel Motor

Removal

1. Switch off the printer and remove the power cable.
2. Remove the Cover, Front on page 235.
3. Remove the Cover, Left on page 236.
4. Remove the Electronics Module Main PCA and PSU on page 256.
5. Remove the Spittoon, Left on page 374.
6. Disconnect the Starwheel Motor electrical connector.

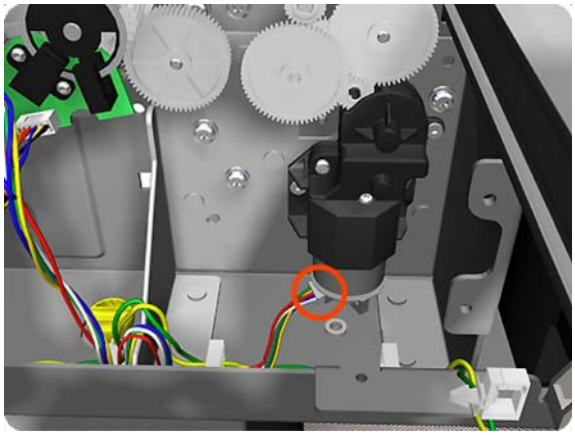

7. Carefully pull the two gear wheels off their shafts to gain access to the Starwheel Motor attachment screws.

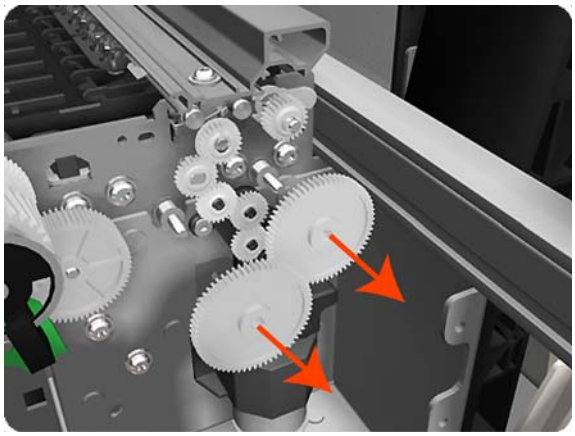

8. Remove three T-8 screws that secure the Starwheel Motor to the printer.

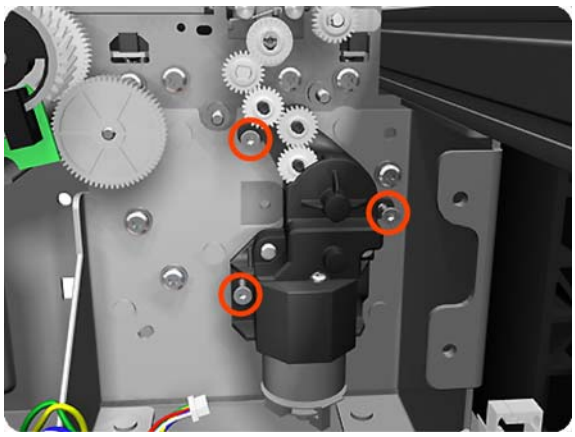

9. Lift the Starwheel Motor out of the printer.

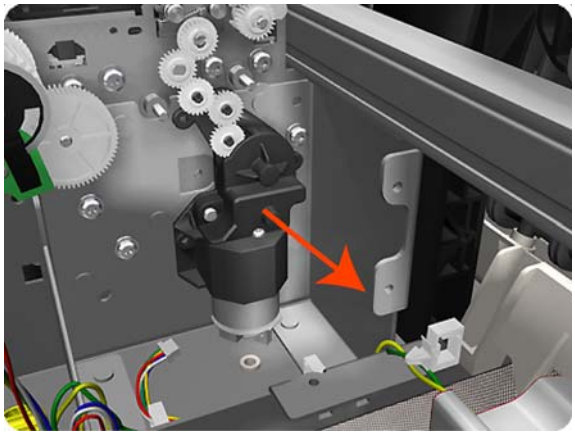

NOTE: When you finish installing or replacing this component, you must perform the necessary Service Calibrations. To find which calibrations you must perform, see Service Calibration Guide to Removal and Installation on page 184.

Trailing Cable

The Trailing Cable, as a service part, is included with the Ink Supply Tubes. For information about the service part, see Scan-Axis Assemblies on page 170.

For the disassembly procedure of the Ink Supply Tubes, see Ink Supply Tubes on page 287.

Removal

1. Switch off the printer and remove the power cable.
2. Remove the Cover, Left on page 236.
3. Remove the Cover, Right on page 241.
4. Remove the Front Panel on page 270.
5. Remove the Cover, Top on page 244.
6. Loosen the T-10 uncapping screw enough that you can move the Carriage Assembly manually.

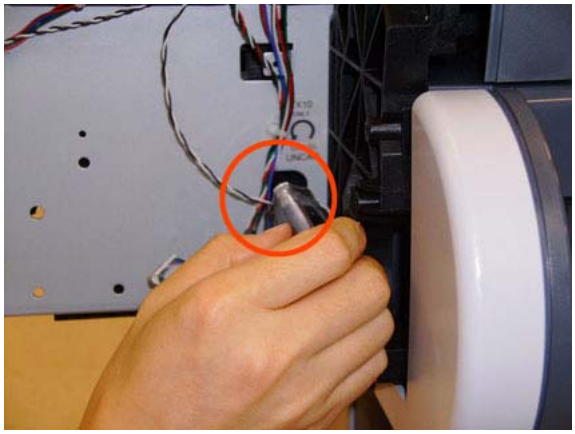

7. Unscrew the small cover of the Carriage PCA.

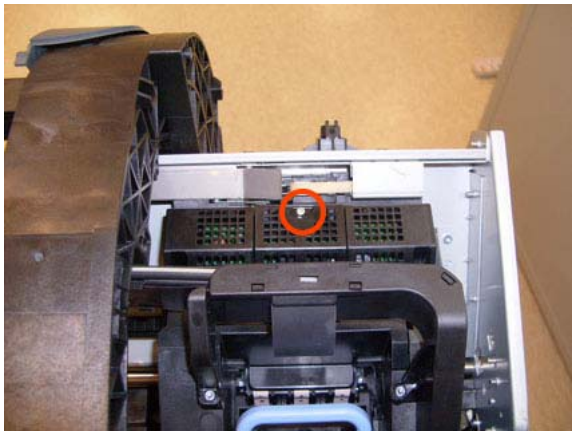

8. Remove the small cover of the Carriage PCA.

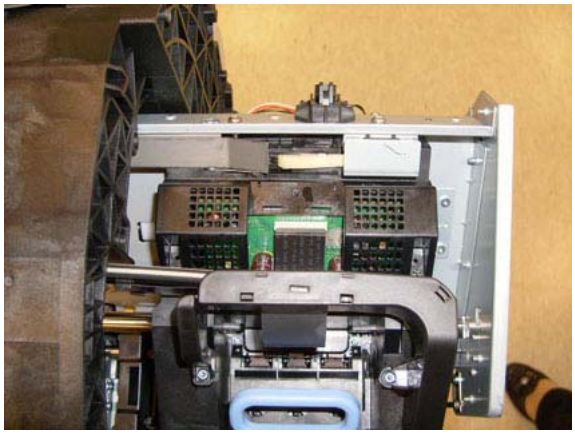

9. Disconnect the ribbon Trailing Cable from the Carriage PCA.

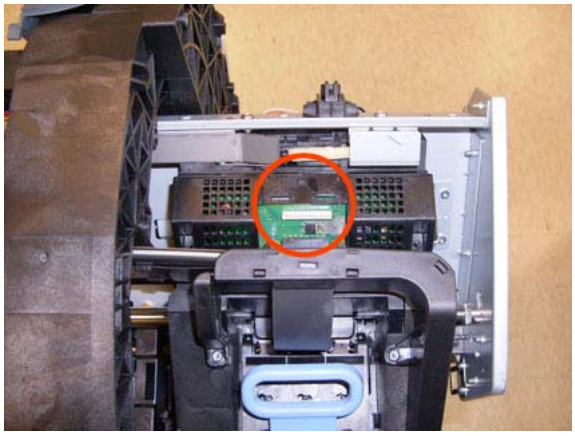

10. Unclip and remove the cable lid.

11. Straighten the ribbon cable of the Trailing Cables and remove the mylar.

12. Slide the Trailing Cables out of the attachment clips of the Carriage Assembly.

13. Slide the Trailing Cables out of the cable and tube holder.

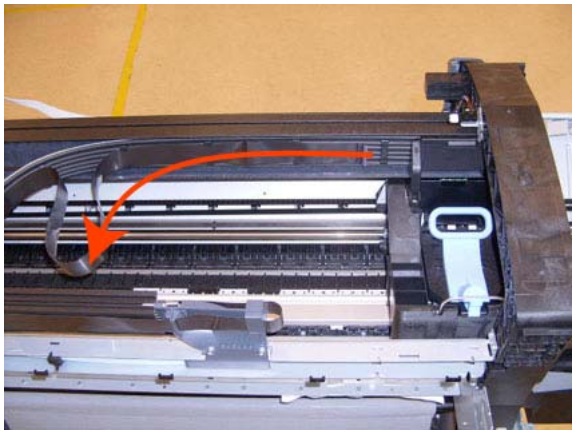

14. Disconnect the ribbon cable of the Trailing Cables from the Electronics Module.

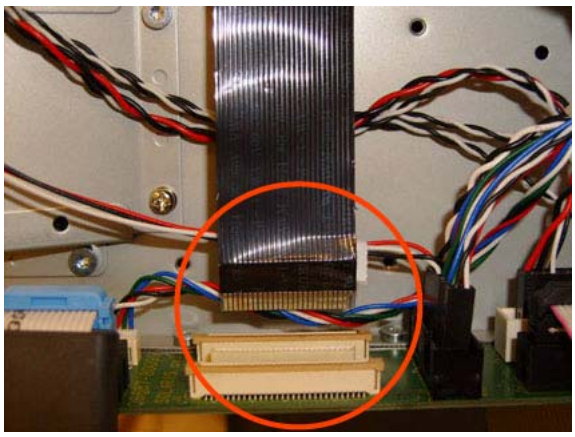

15. Unroute the Trailing Cable from the clip.

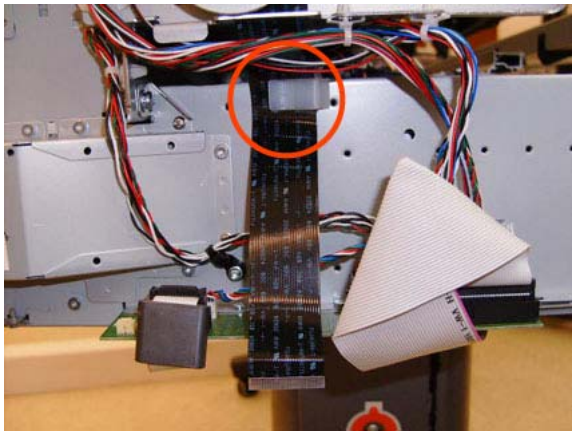

16. Pass the Trailing Cable through the slot.

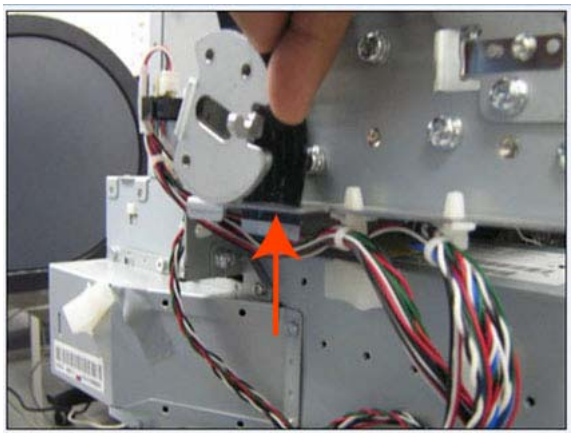

17. Unclip and remove the four cable clamps from the Trailing Cables.

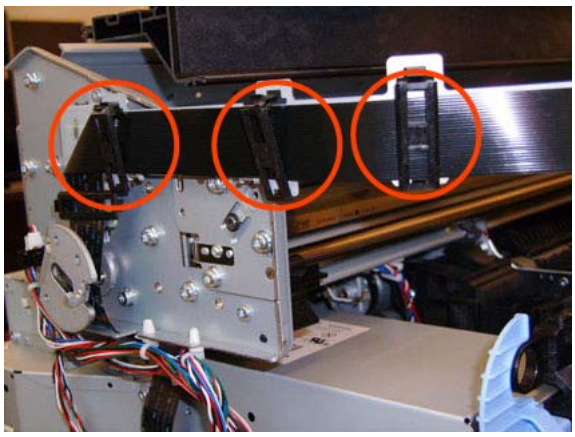

18. Pass the Trailing Cable through the slot.

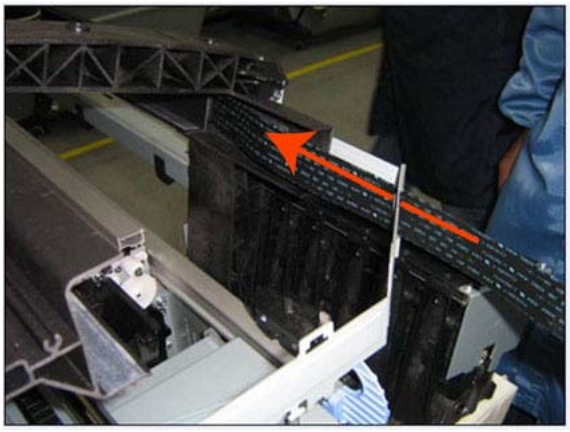

19. Pass the Trailing Cable through the slot.

20. Continue to unroute and unclip the trailing cable.

21. Continue to unroute and unclip the trailing cable.

22. Remove the Trailing Cables from the printer.

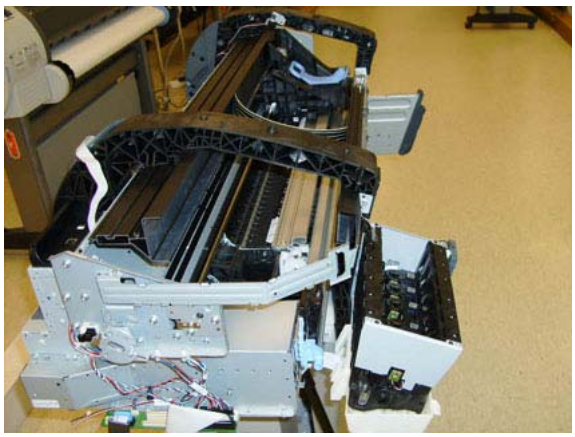

NOTE: When you finish installing or replacing this component, you must perform the necessary Service Calibrations. To find which calibrations you must perform, see Service Calibration Guide to Removal and Installation on page 184.

Installation

1. Route the Trailing Cable as in the disassembly instructions, taking care not to damage the cable.

2. When you route the Trailing Cable around the bend, use your finger to leave a healthy bend for the cable. Avoid creasing the cable.

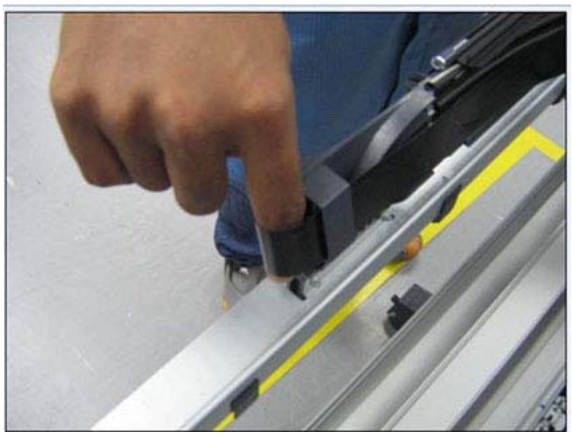

Wall Spacers

Removal

The illustrations show the removal of the Right Wall Spacer; the procedure is the same for the Left Wall Spacer.

1. Remove a screw.

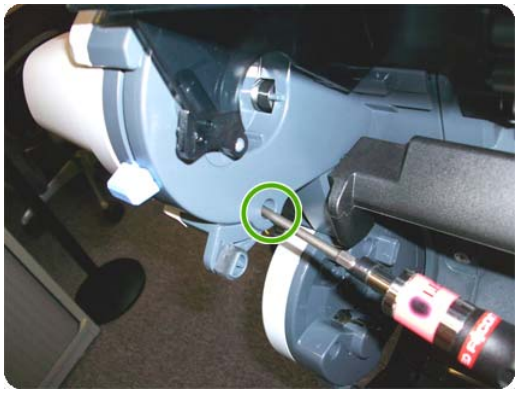

2. Open the Upper Roll Cover.

3. Remove a screw.

4. Remove the Upper Roll Cover Support.

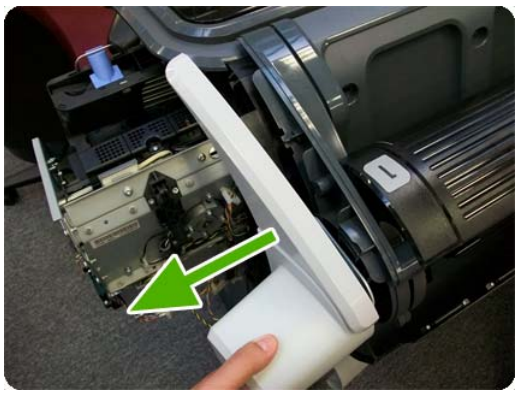

5. Remove a screw.

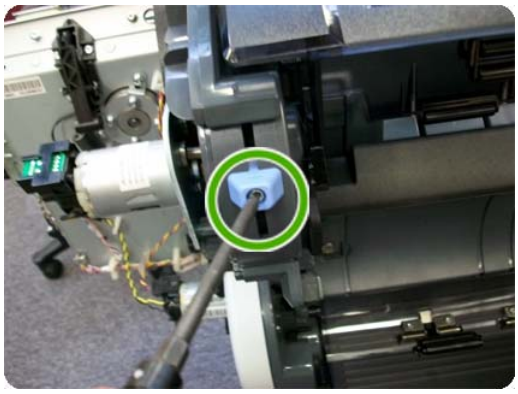

6. Remove a blue Wall Spacer.

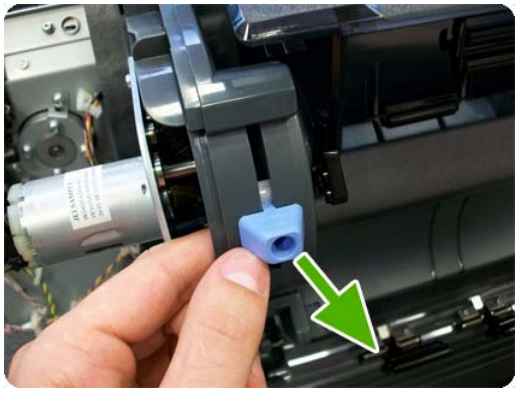

7. Remove a white slider.

After removing Right and Left Wall Spacers, here are the removed parts.

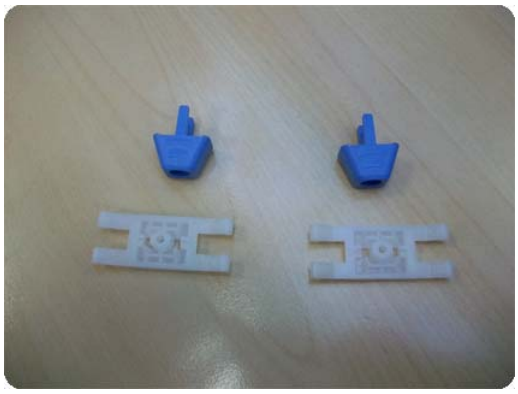

Window

Removal

NOTE: The Window can also be removed with the Top Cover to avoid scratching the Window. See Cover, Top on page 244.

1. Switch off the printer and remove the power cable.
2. Open the Window.

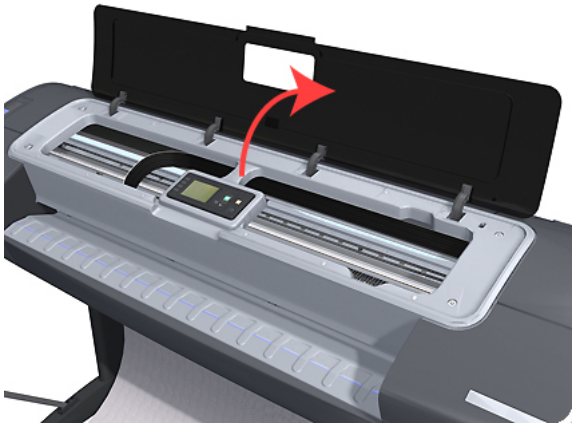

3. Remove the two T-15 screws that secure the left Window hinge locking plate to the Top Cover.

4. Remove the left Window hinge locking plate from the Top Cover.

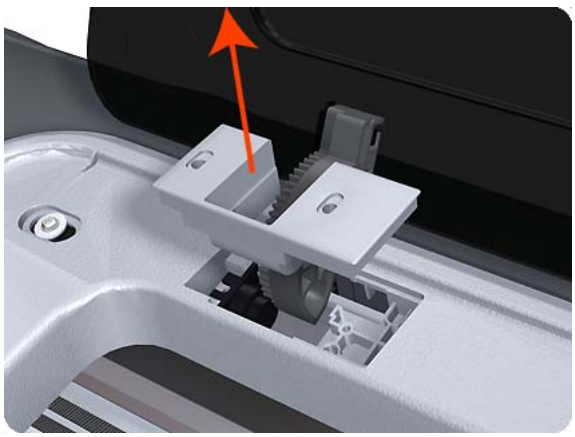

5. Remove the Damper Rotary from the Top Cover (T1200 only).

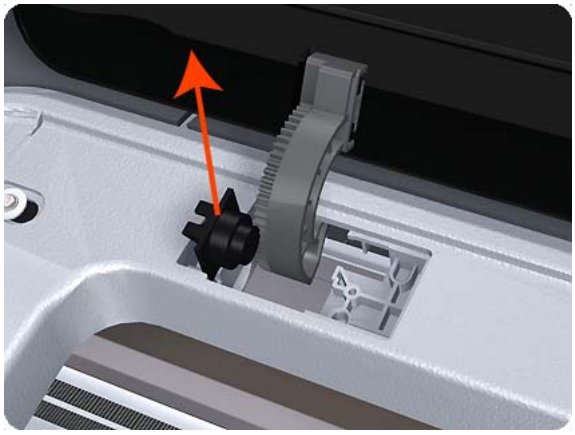

6. Remove the T-15 screws that secure each of the remaining three Window hinge locking plates to the Top Cover.

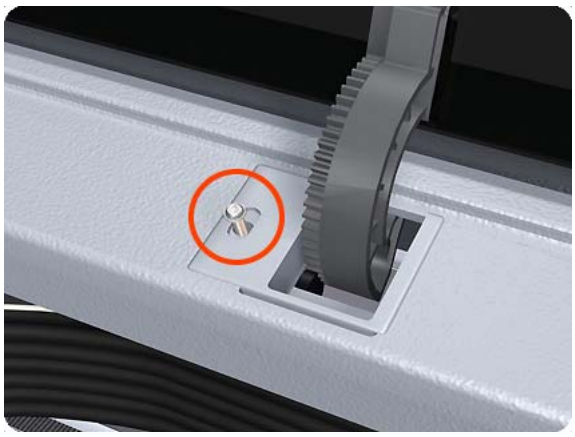

7. Remove the remaining three Window hinge locking plates from the Top Cover.

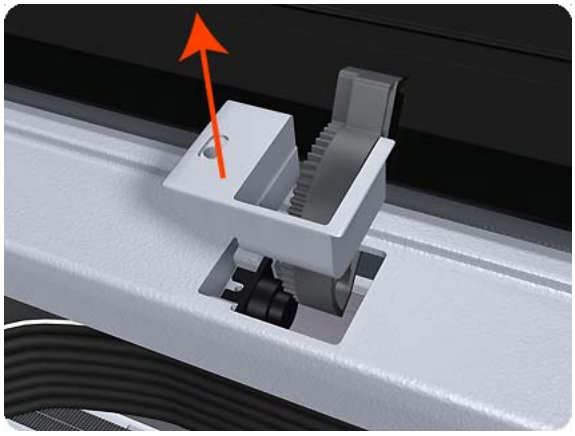

8. Remove the remaining three Damper Rotary pieces from the Top Cover.

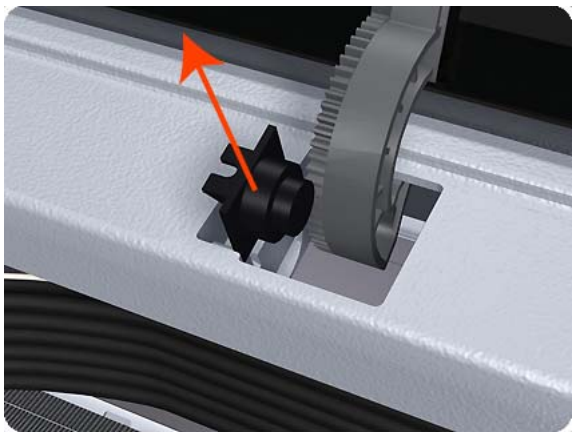

9. Grip the Window at the left and right edges and move it horizontally towards the right as far as it will go.

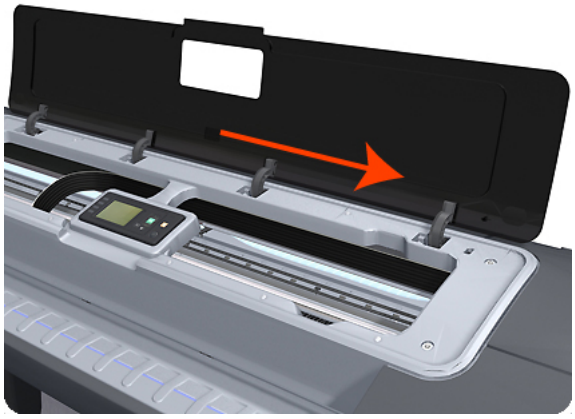

10. Pull the Window towards the front to disengage the hinges.

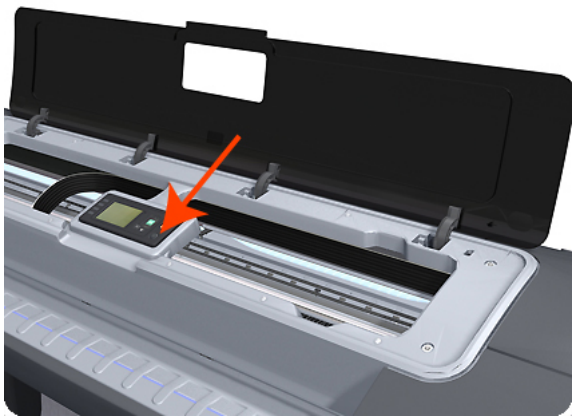

11. Lift the Window vertically out of the printer.

Window Position Sensor

NOTE: The sensor design has changed slightly since the illustrations were made. The new sensor is shown below.

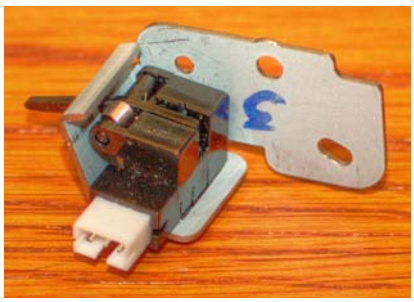

Removal

1. Switch off the printer and remove the power cable.
2. Remove the Cover, Right on page 241.
3. Remove the Cover, Left on page 236.
4. Remove the Front Panel on page 270.
5. Remove the Cover, Rear on page 240.
6. Remove the Cover, Top on page 244.
7. Disconnect the Window Position Sensor.

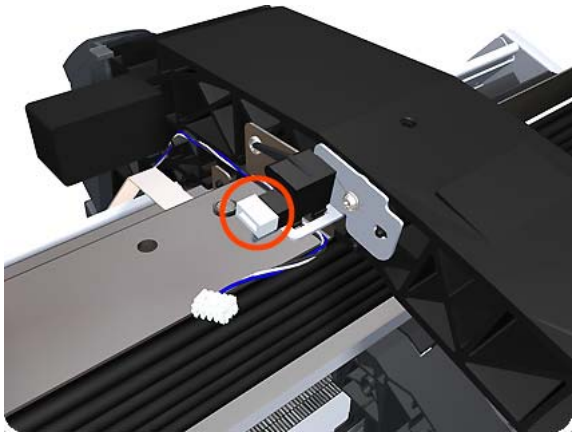

8. Remove one T-15 screw that secures the Window Position Sensor to the printer.

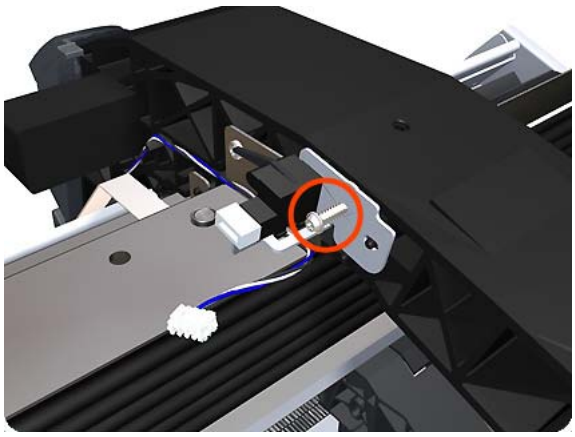

9. Remove the Window Position Sensor from the printer.

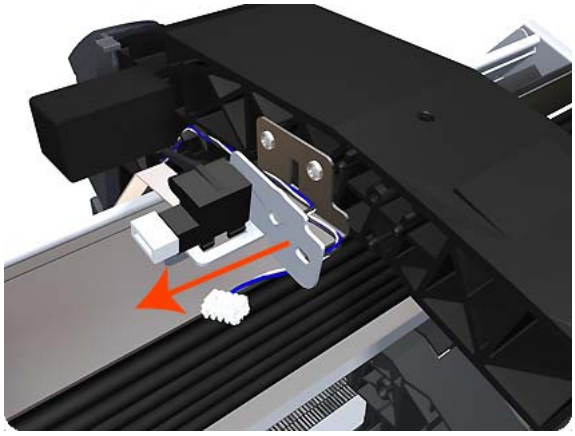

NOTE: When you finish installing or replacing this component, you must perform the necessary Service Calibrations. To find which calibrations you must perform, see Service Calibration Guide to Removal and Installation on page 184.

7 Preventive Maintenance

- Preventive Maintenance
- Preventive Maintenance Kits

Preventive Maintenance

Cleaning the Printer

To maintain the printer in good operating condition, keep it free of accumulated dust, ink, and other contamination. Cleaning intervals are determined by the printer environment and by the types of printer supplies used.

General Cleaning

Proper general cleaning should include the following:

NOTE: To prevent an electric shock, make sure that the printer is switched OFF and unplugged before any cleaning is performed. Do **not** let any water get inside the printer.

1. Blow away dust accumulation with compressed air if available.
2. Clean the outer surface of the printer with a damp sponge or cloth. Use a mild soap and water solution if necessary. Do not use abrasive cleaners.
3. Wipe the printer dry with a soft lint-free cloth.

Cleaning the Drive Roller and Overdrive

NOTE: If ink is spilled on the Overdrive, remove the ink impapertely. Due to the ink's reflectance, ink on the Overdrive can disrupt the printer's edge-sensing function. To remove any ink from the Overdrive, perform the following procedure:Prevent water or other liquids from running onto electrical components or circuits, or through openings in the Electronics Module.

1. Perform the Turn Drive Roller Utility. See Turn Drive Roller on page 130.
2. Open the window and apply any common household cleaning solution (water based only) to a soft, lint-free rag and apply it to the Drive Roller and Overdrive surface while it is rotating. Make sure that you thoroughly clean the Drive Roller and Overdrive surface.
3. Press **Enter** when you have completed the cleaning procedure.
4. Allow the Drive Roller to dry before loading paper in to the printer.

Cleaning the Encoder Strip

1. Make sure that the printer is not printing and that the Carriage Assembly is located at the Service Station on the far right side of the printer.

2. Using tap water and a small cloth that will not leave fibers in the printer, dampen the cloth and remove any excess water so that the cloth is damp but not wet.

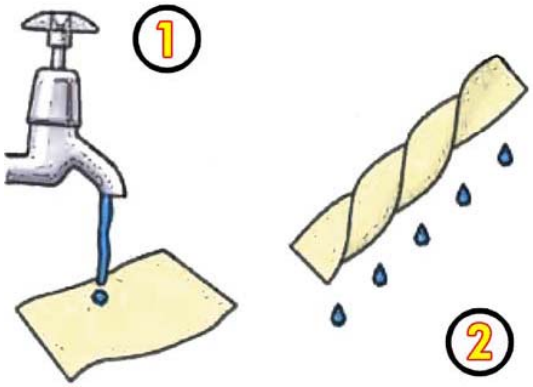

3. Open the printer window.

4. Hold the cloth in an inverted “U” shape around the Encoder Strip and carefully wipe until no ink residue appears on the cloth. Be very careful not to scratch the Encoder Strip with your fingernail or any other object.

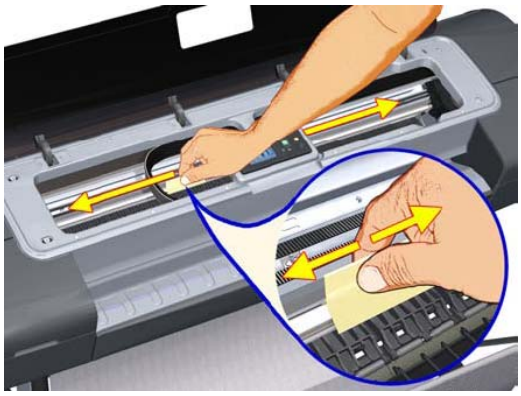

Make sure that you are holding the cloth correctly.

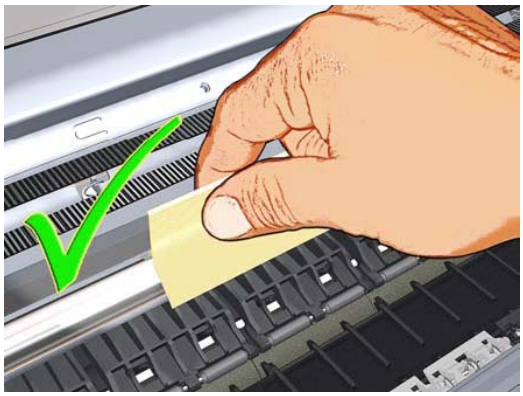

NOTE: Do not move the Carriage Assembly away from the Service Station.

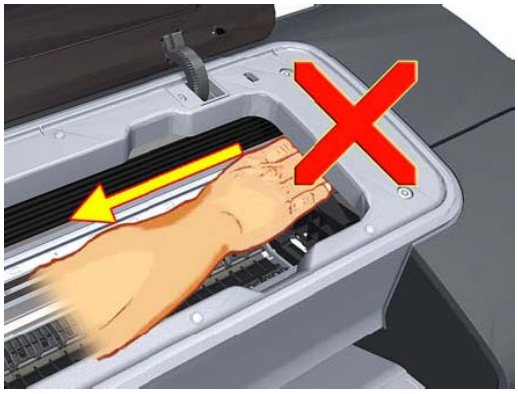

5. Close the printer window.

6. On the front panel, select the Ink icon, and then select Replace Printheads. The Carriage Assembly moves to the left and stops in the correct position to remove the printheads.

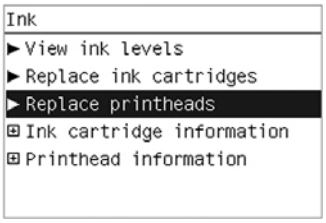

7. Turn off the printer by using the power switch on the back of the printer.

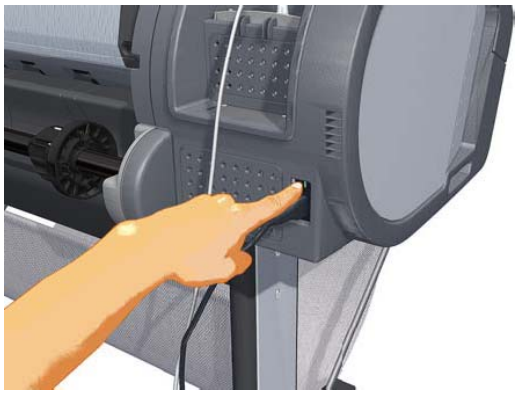

8. Open the printer window and move the Carriage Assembly further to the left, allowing you to access the Service Station.

9. Clean the part of the encoder strip inside the Service Station by repeating steps 2 to 6.

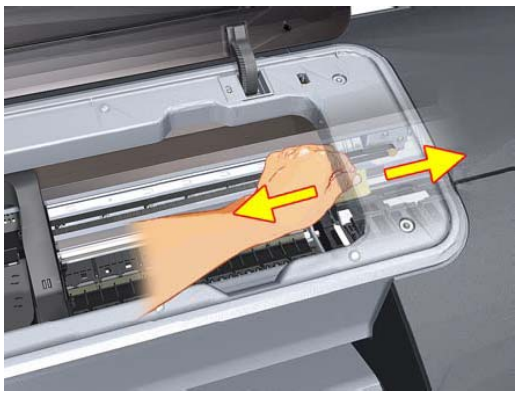

10. Close the printer window.
11. Turn the printer back on.

Carriage Assembly Lubrication

To ensure correct operation of the printer you must lubricate the Carriage Assembly whenever any of the following are encountered if:

- The Front Panel displays "Maintenance #1 required".
- There is excessive noise when moving the Carriage Assembly.
- A shut down of the carriage PWM error message appears.
- There are IQ (vertical banding problems).

You should also lubricate the Carriage Assembly whenever you change any of the following service parts:

- The Carriage Rear Bushing.
- The Carriage Assembly.
- The Carriage Rail Oiler.

To lubricate the Carriage Assembly you will require the Lubrication Kit (Q5669-60692). Use the following procedure to lubricate the Carriage Assembly:

1. Use the IPA alcohol (Q6675-60070) and the cleaning cloth to clean the Carriage Rail and the Carriage Slider Rod.
2. Use an Oil Dispenser (Q6675-60062) to lubricate the Carriage Rail and the Carriage Slider Rod.
3. Replace the Carriage Rail Oiler on page 224 with the new one contained in the kit and add 2 or 3 drops of oil to the foam of the Carriage Rail Oiler.
4. Use an Oil Dispenser (Q6675-60062) to lubricate the Carriage Rear Bushing.

Moisture on the Printer

Users should use the printer in an environment between 20% and 80% relative humidity. To recover from moisture condensation, turn the printer Off, and, using the main roller as a reference, wait until the printer is completely dry before using it again.

Noisy Carriage Bushing

To prevent noisy movement of the carriage, remove aluminum or dust particles from the bushing at the back of the carriage, and from the slider path along which the bushing moves. Lubricate the slider path using the Lubrication Kit (Q5669-60692).

Belt Swelling

To prevent new belts from swelling incorrectly, keep them in their bags with desiccant until you need to install them.

Level of Printer Usage

Normal printer use means 6,000,000 Carriage Cycles (which corresponds to approximately 100,000 A0 prints on average). Under normal usage conditions, it will be approximately 5 years before the printer needs maintenance. If the printer is used more than the normal usage conditions, then it will need maintenance service much more frequently.

One of the EEROM counters is assigned to counting the number of carriage cycles.

Service Part	LIFE_VALUE	Maintenance Advice
Belt Cycles	3,000,000	PMKIT1
Bushings Life	3,000,000	PMKIT1
Trailing Cable Cycles	3,000,000	PMKIT1
Scan Axis Cycles	3,000,000	PMKIT1
Scan Axis Distance Covered	4,500,000	PMKIT1
Tubes Cycles	3,000,000	PMKIT1
Right Spittoon Volume	600,000,000	PMKIT2
Left Spittoon Volume	51,000,000	PMKIT2

When these components of the printer exceed this amount, the front panel displays the following message:

"Maintenance #1 required"

"Maintenance #2 required"

Once one of the maintenance advised messages is displayed, the relevant preventive maintenance kit must be used to replace the most worn parts of the printer. See Removal and Installation on page 177 when replacing the necessary parts.

Preventive Maintenance Kits

There is no preventive maintenance kit for the cutter, which is expected to last for the life of the printer.

Preventive Maintenance Kit #1 for 44-in models (CH538-67024)

Part Number	Description
CH538-67044	Carriage with Cutter Assembly SV

Part Number	Description
CH538-60141	Scan Axis Motor SV
CH538-67025	Tube System 44 Assembly with Trailing Cable SV
CH538-67018	Belt 44 SV

NOTE: The Lubrication Kit is not included in the Preventive Maintenance Kit. See Tools 2 on page 175.

Preventive Maintenance Kit #1 for 24-in models (CQ305-60017)

Part Number	Description
CH538-67044	Carriage with Cutter Assembly SV
CH538-60141	Scan Axis Motor SV
CK837-67014	T1120/620 Ink Supply Tubes 24
CQ305-60016	T770 Belt 24 SV

NOTE: The Lubrication Kit is not included in the Preventive Maintenance Kit. See Tools 2 on page 175.

Preventive Maintenance Kit #2 (CH538-67040)

Part Number	Description
CH538-60051	Service Station Assembly

A Front-panel menu maps

This appendix reproduces the front-panel menu map of each printer, in case you do not have access to the printer and cannot it print yourself.

NOTE: Any firmware update may cause changes to the menu map, so the maps shown here may become out of date.

- HP Designjet T770
- HP Designjet T770 HD
- HP Designjet T1200

HP Designjet T770

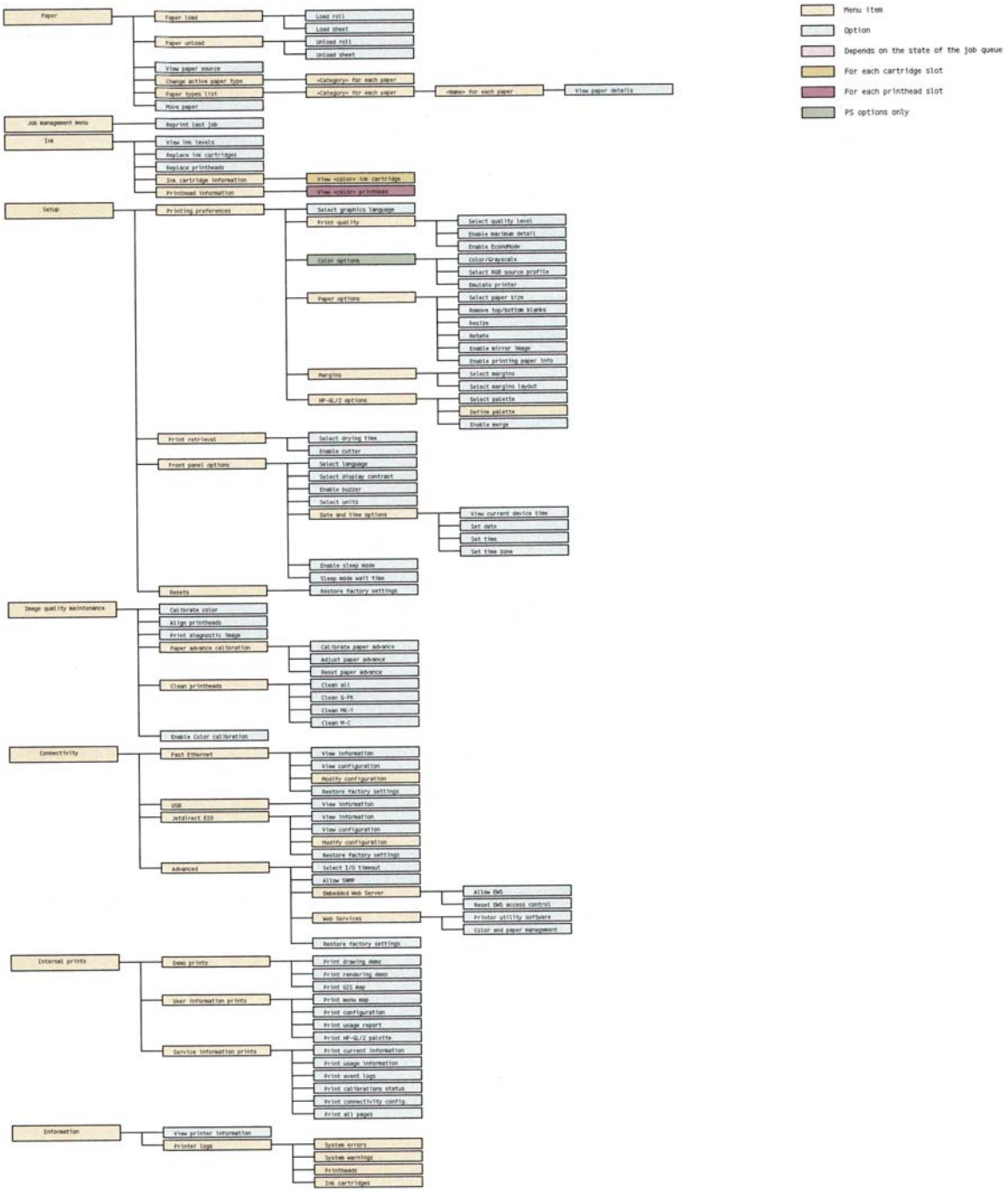

HP Designjet T770 HD

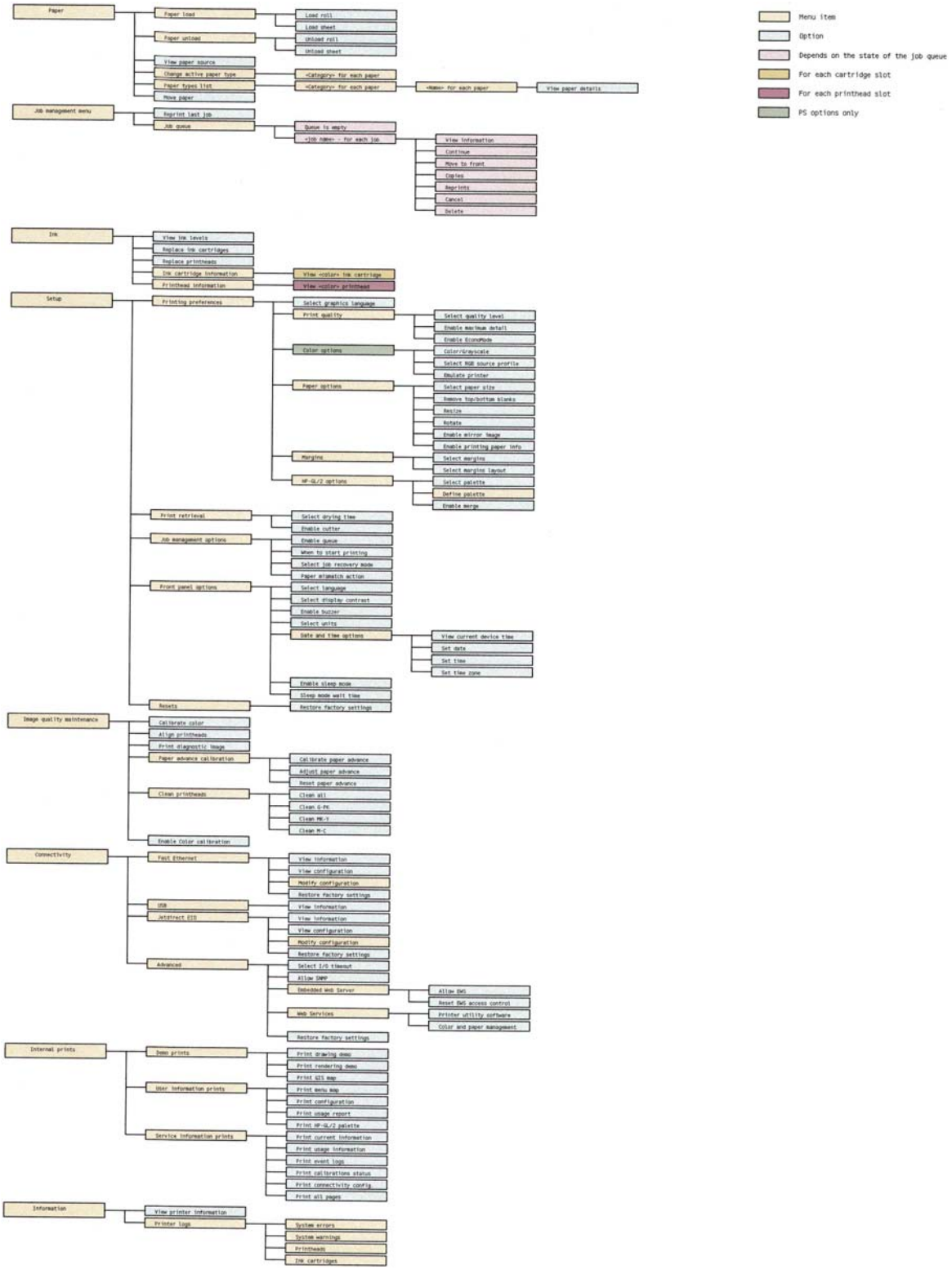

HP Designjet T1200

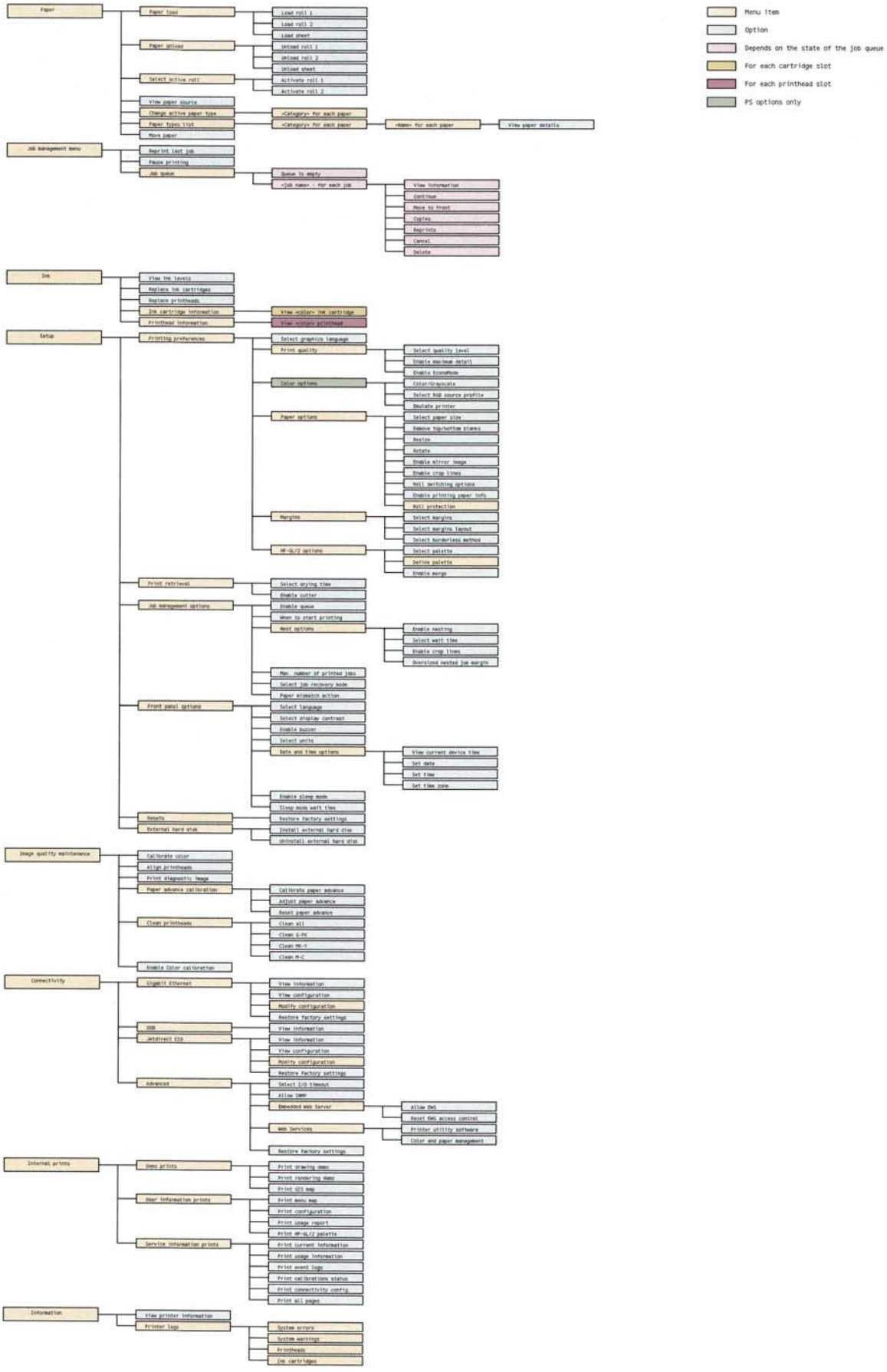

B CSR installation fliers

This appendix reproduces the fliers that illustrate how to install CSR parts.

- Cutter assembly
- Freewheel assembly
- Freewheel assembly (screwdriver)
- Left side panel (T1200)
- Pinch arm assembly
- Pinch arm assembly (screwdriver)
- Roll cover upper bumpers
- Roll cover upper bumpers (screwdriver)

Cutter assembly

1.

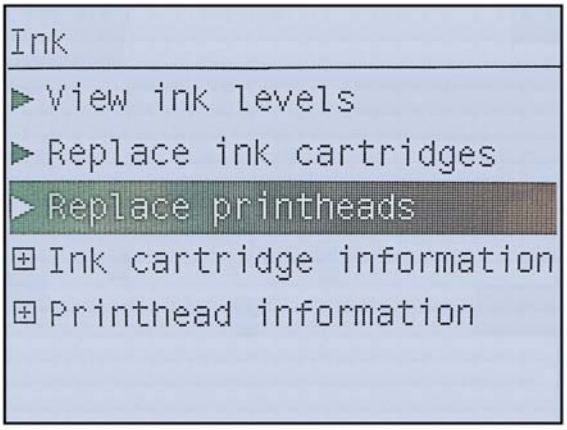

2.

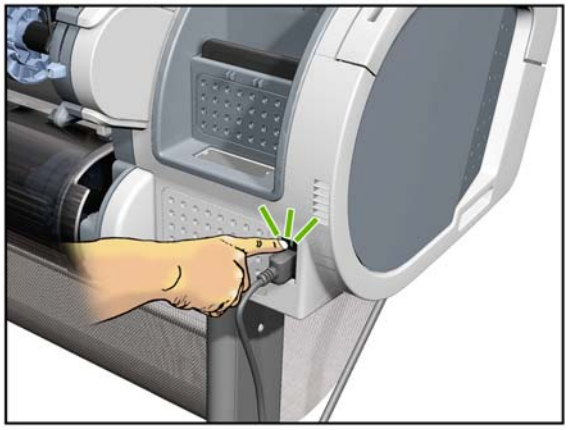

3.

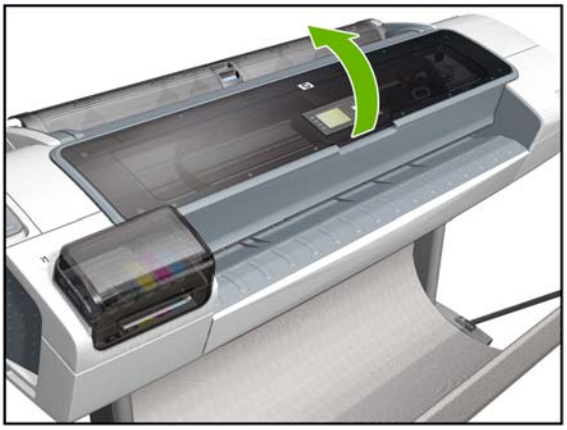

4.

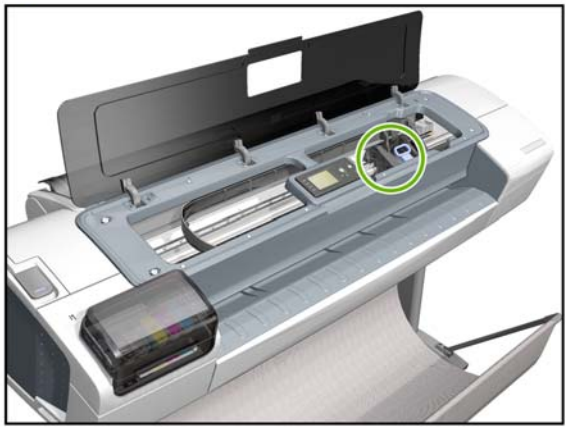

5.

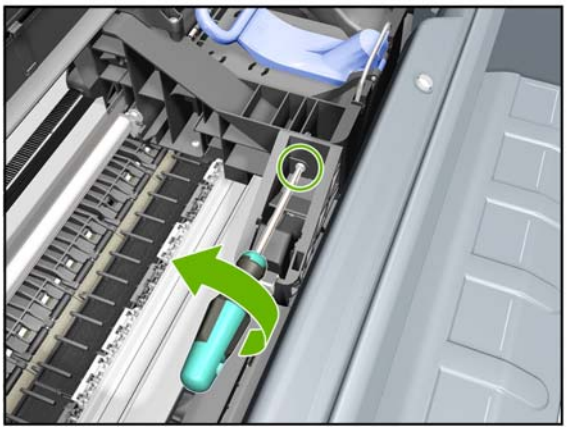

6.

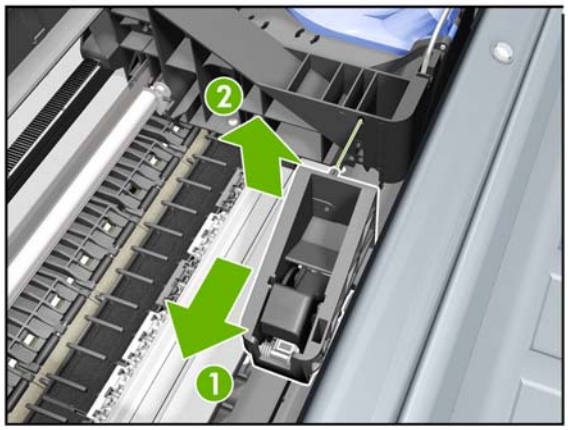

7.

8.

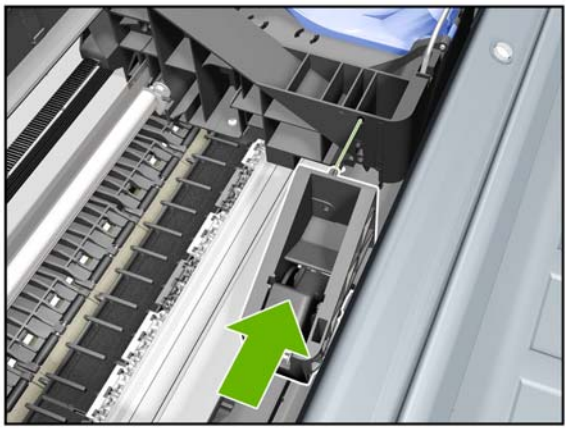

9.

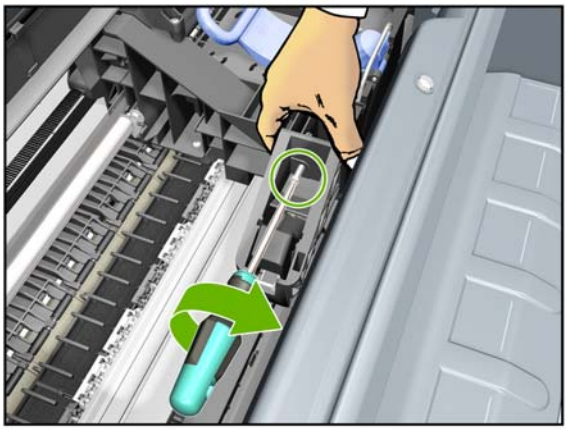

10.

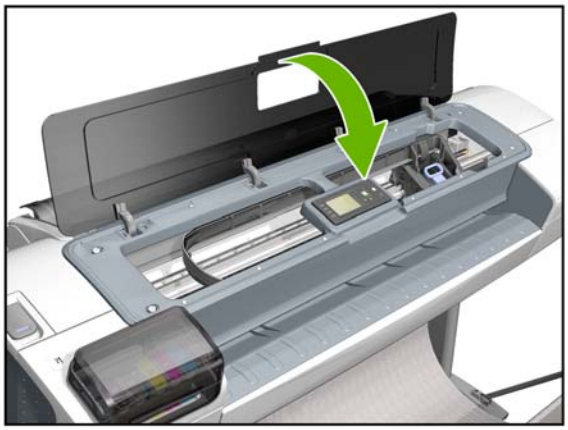

11.

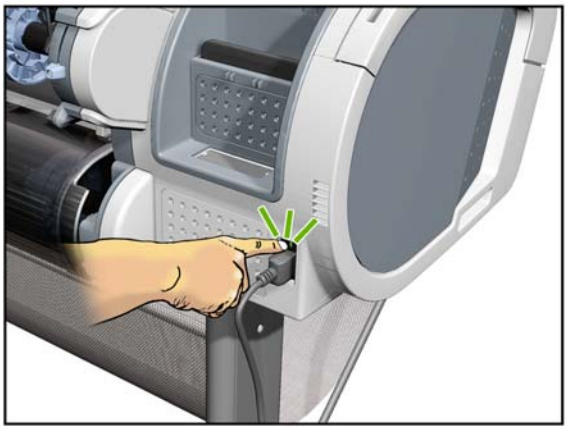

Freewheel assembly

1.

2.

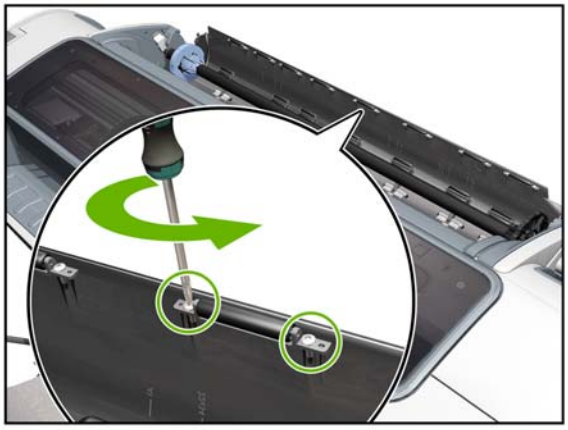

3.

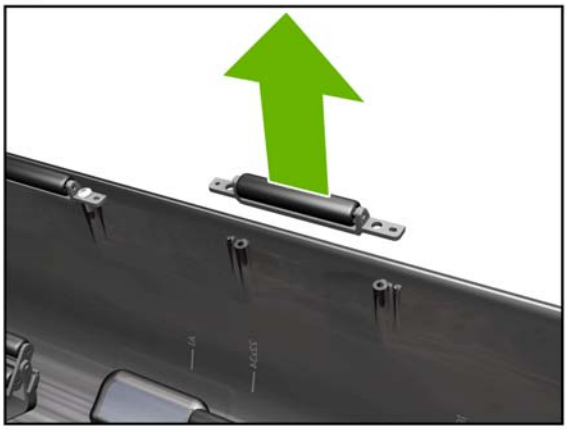

4.

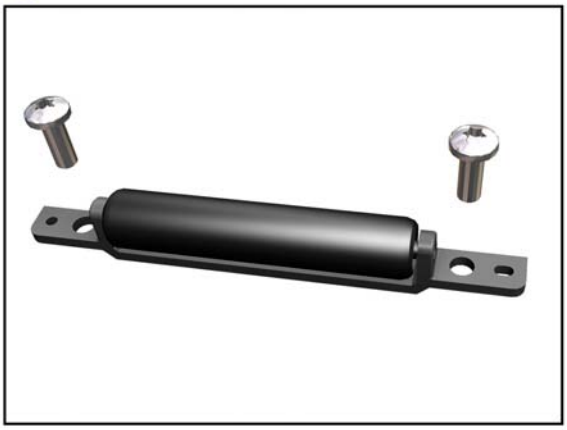

5.

6.

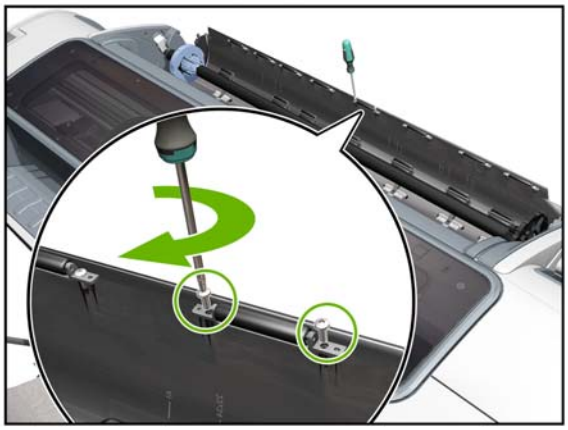

7.

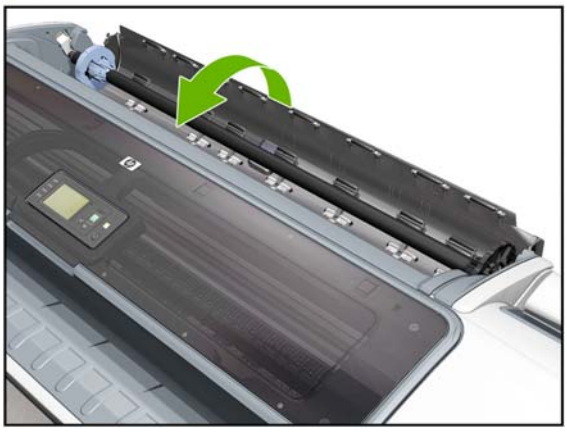

Freewheel assembly (screwdriver)

1.

2.

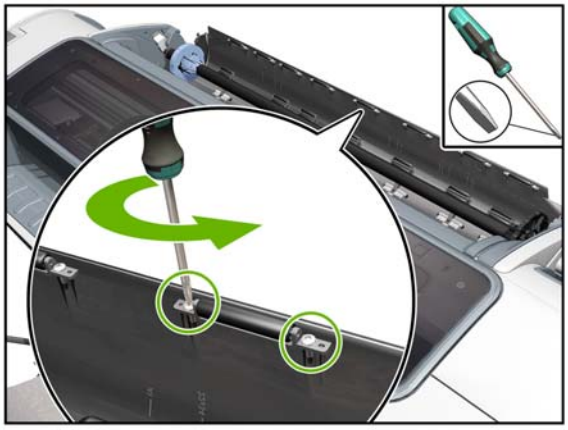

3.

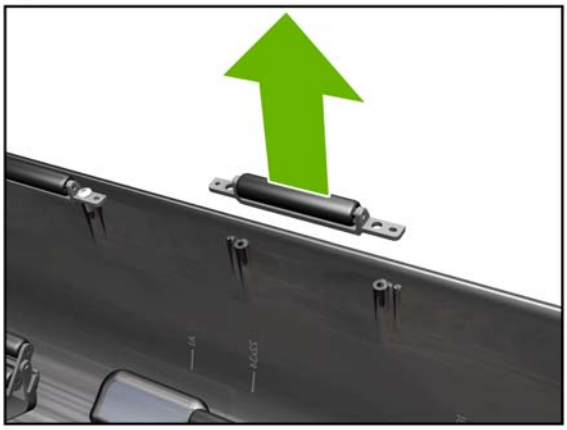

4.

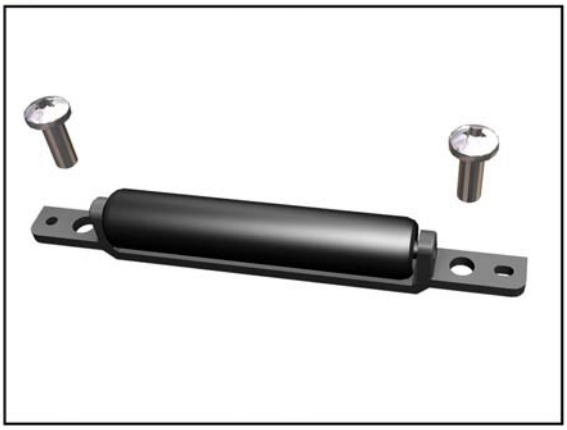

5.

6.

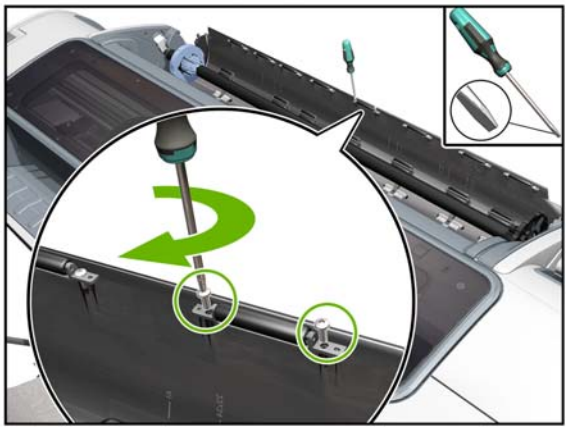

7.

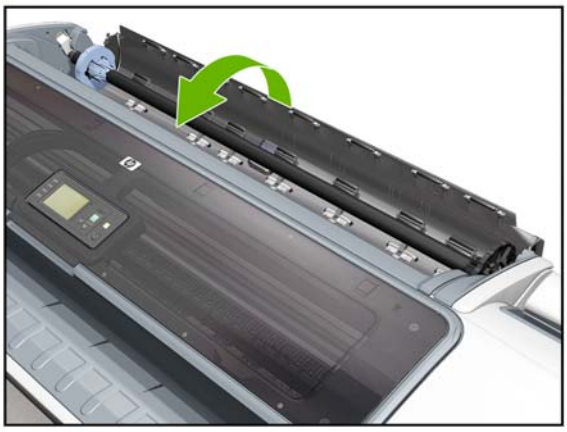

Left side panel (T1200)

1.

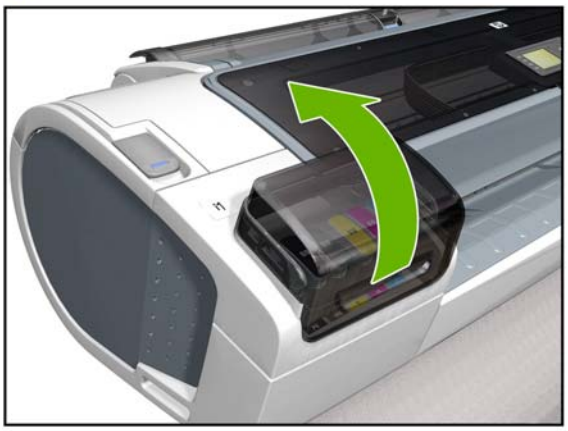

2.

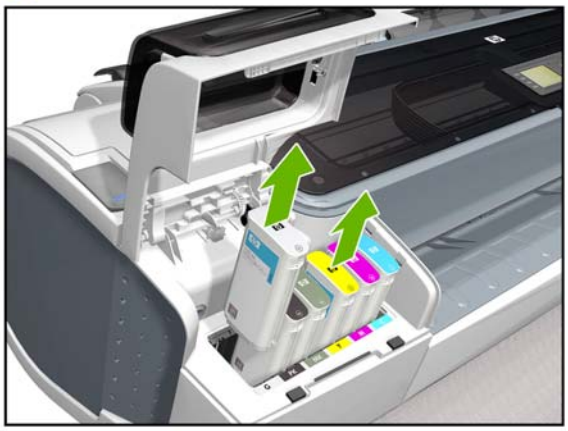

3.

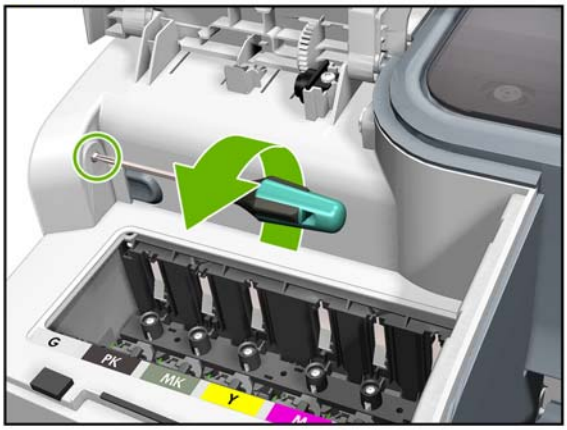

4.

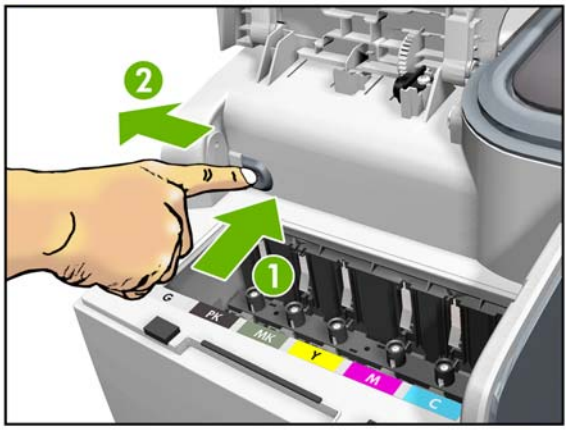

5.

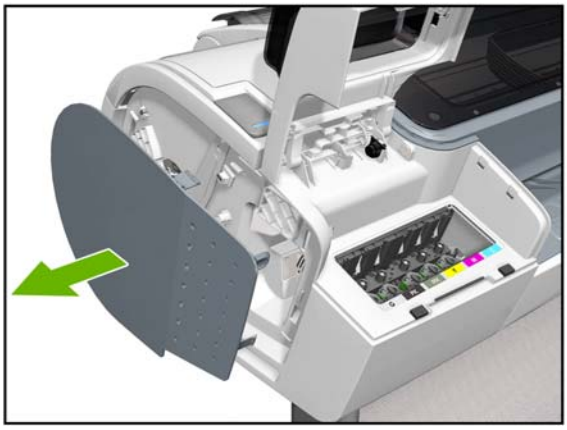

6.

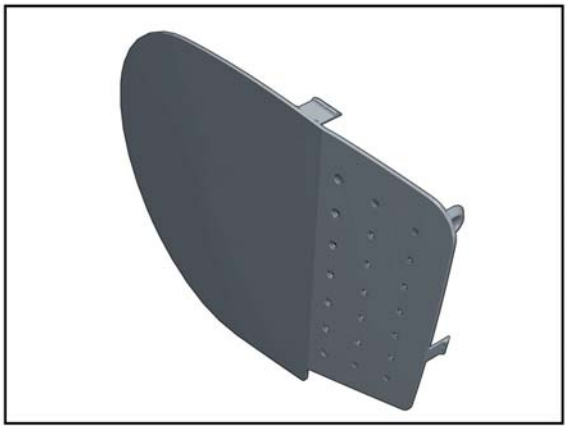

7.

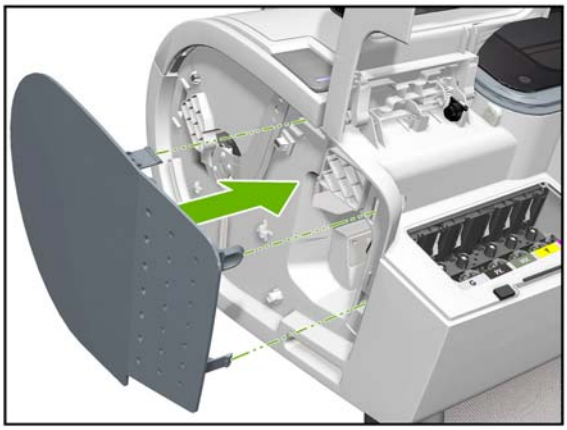

8.

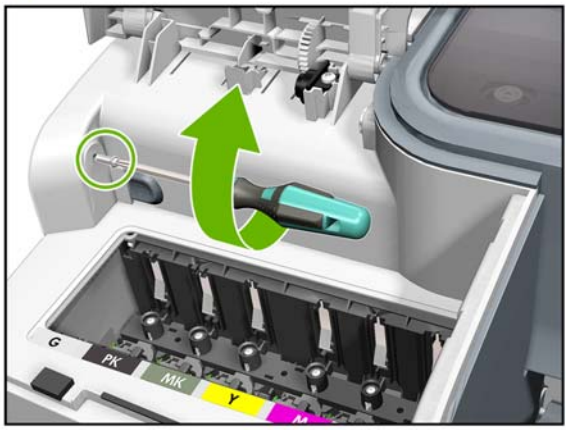

9.

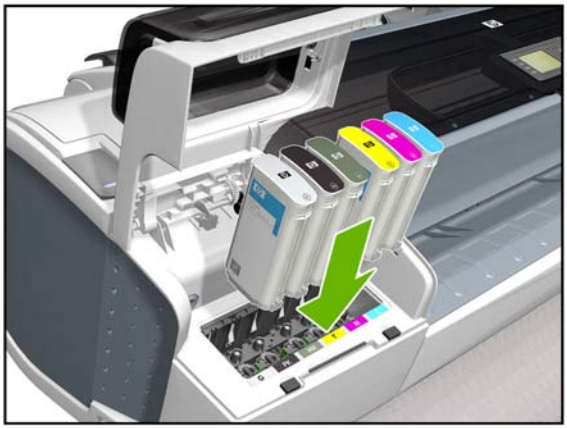

10.

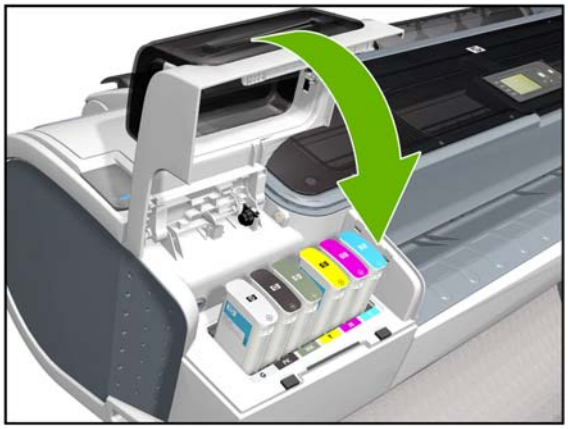

Pinch arm assembly

1.

2.

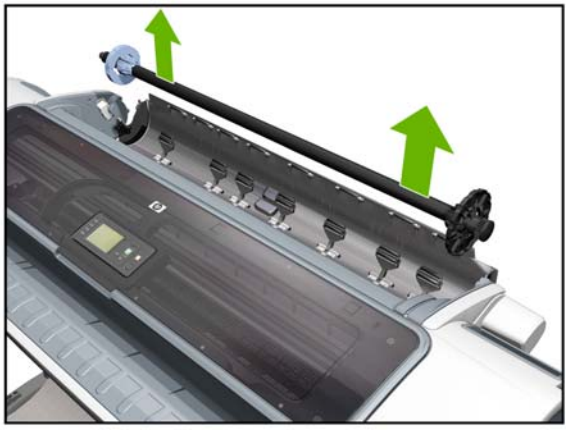

3.

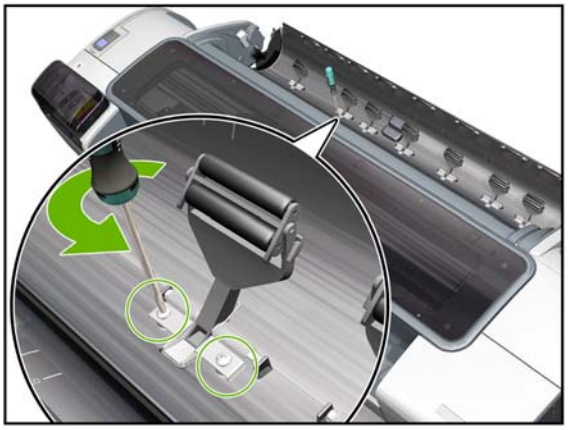

4.

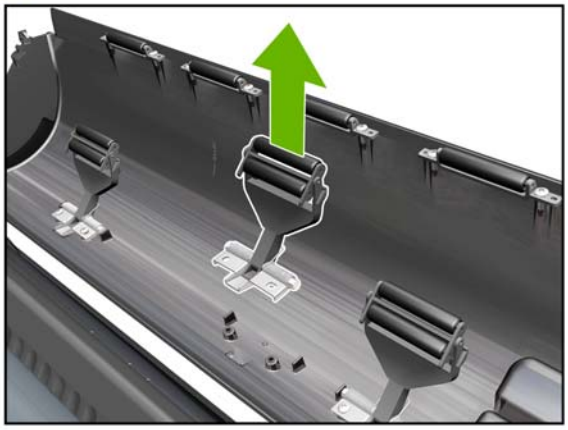

5.

6.

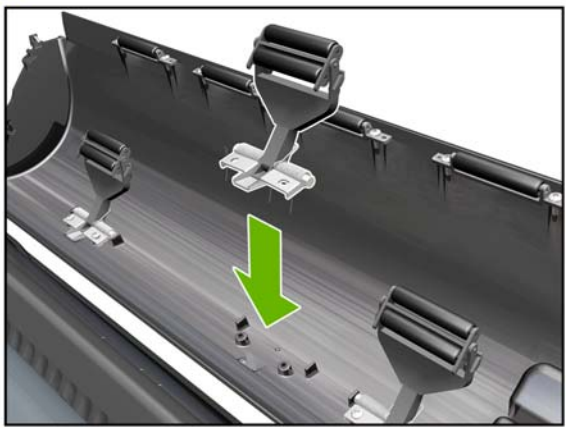

7.

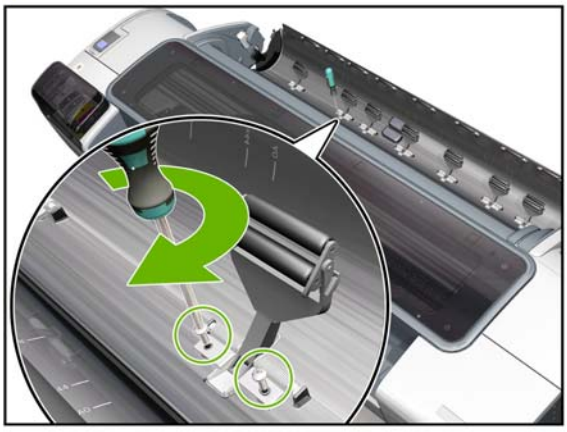

8.

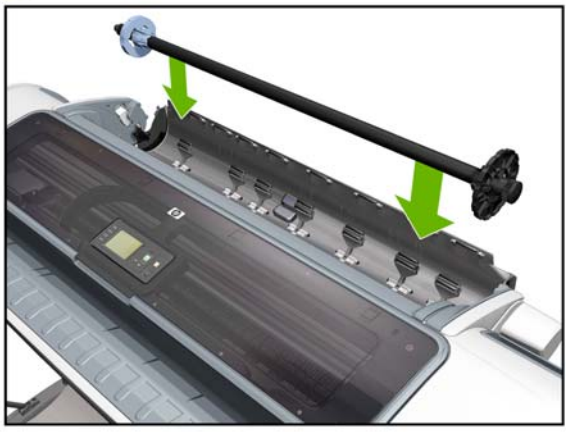

9.

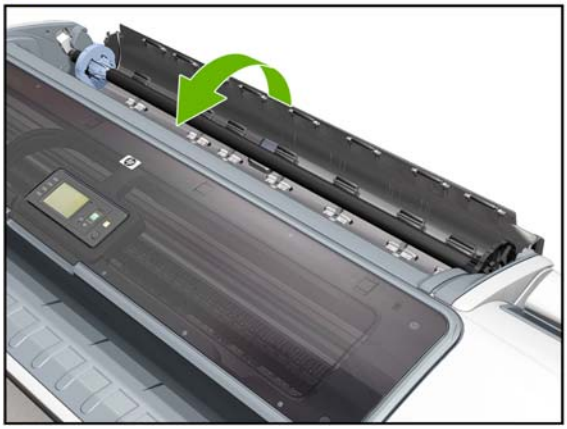

Pinch arm assembly (screwdriver)

1.

2.

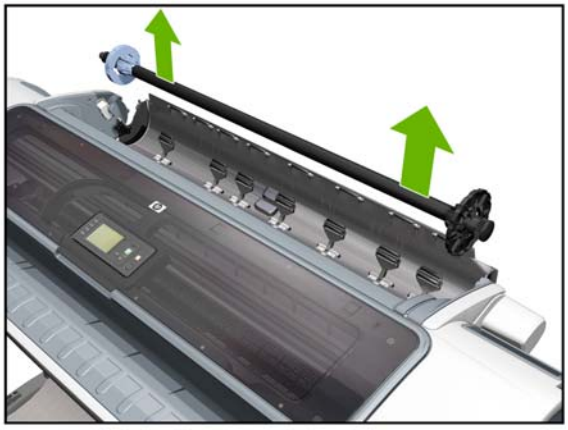

3.

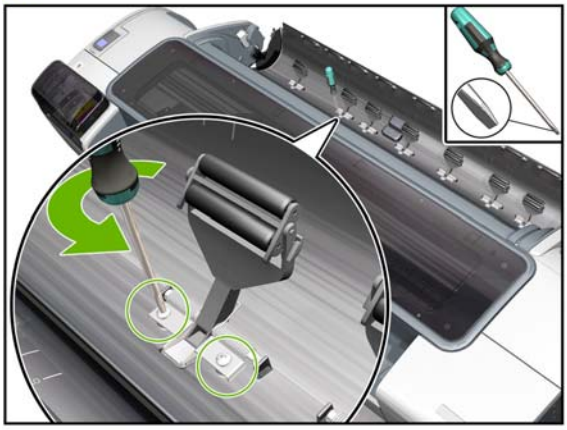

4.

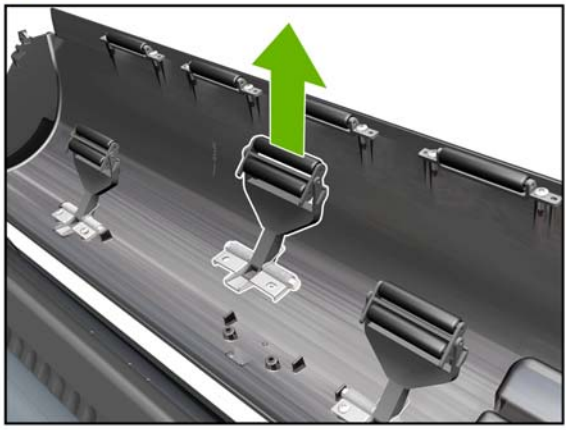

5.

6.

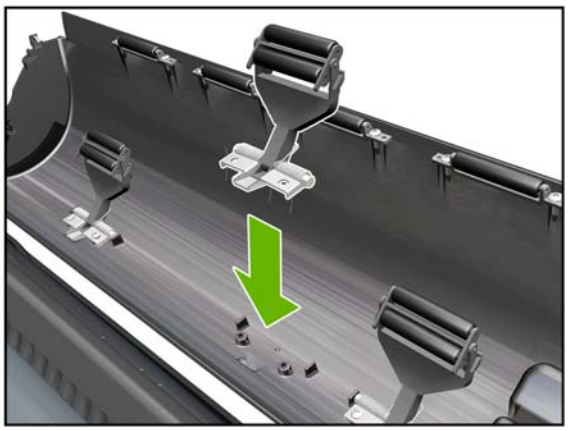

7.

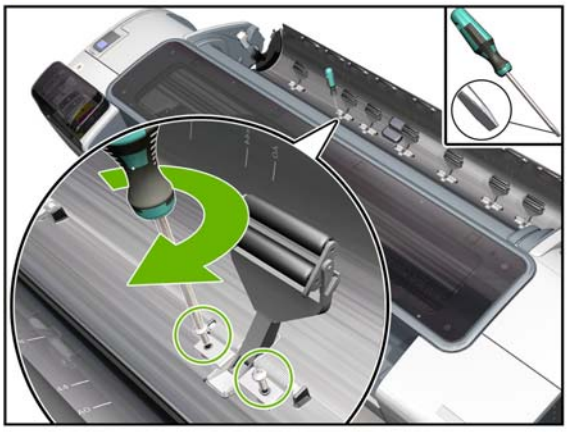

8.

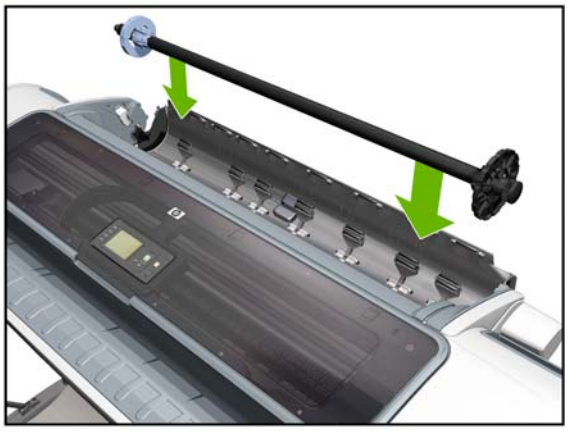

9.

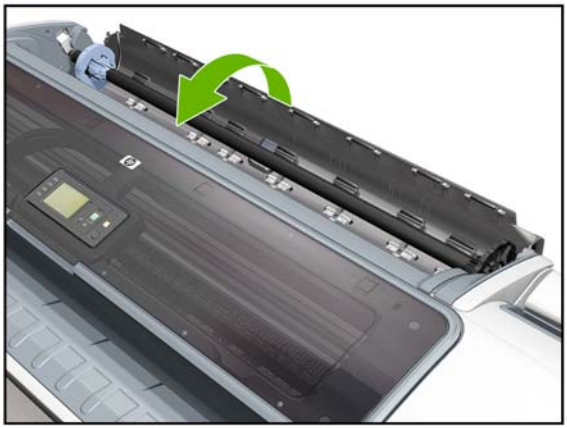

Roll cover upper bumpers

1.

2.

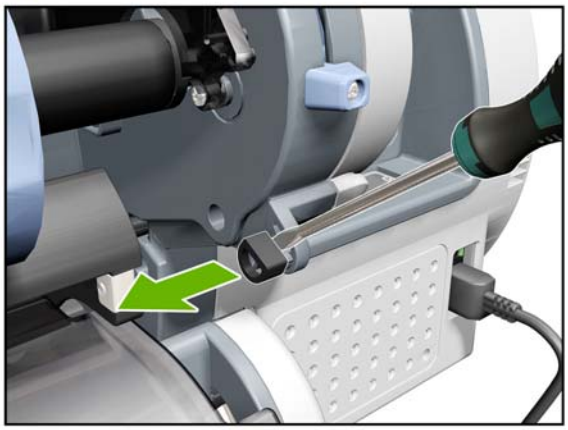

3.

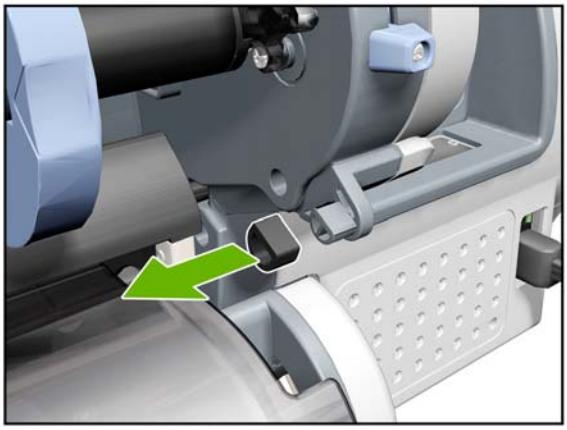

4.

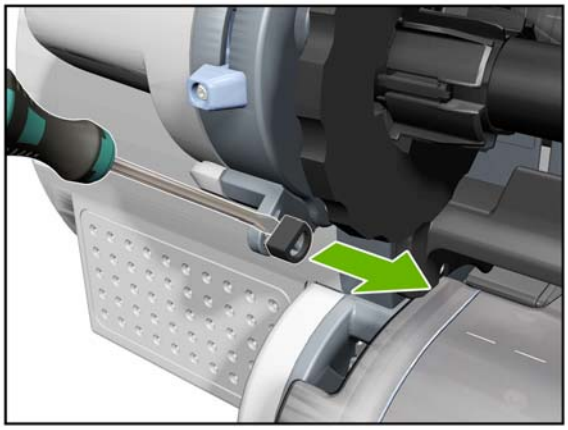

5.

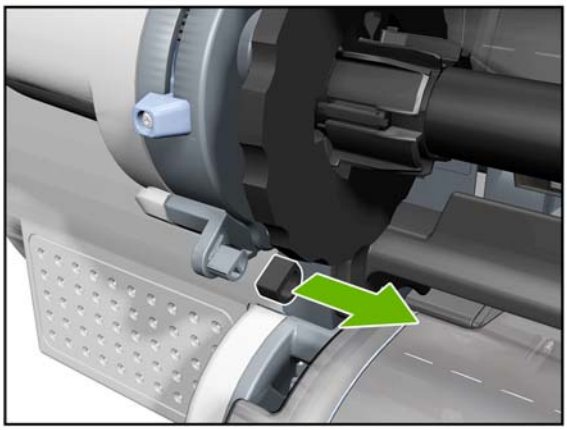

6.

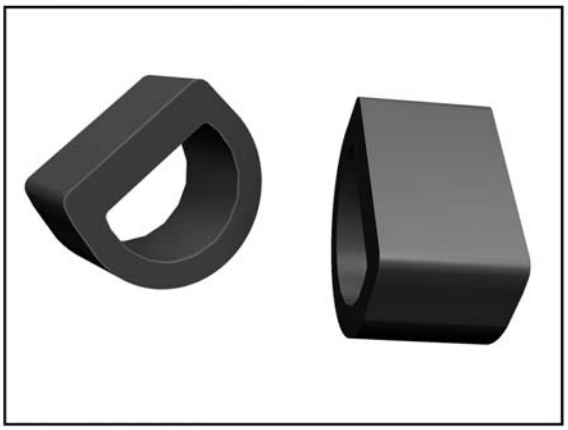

7.

8.

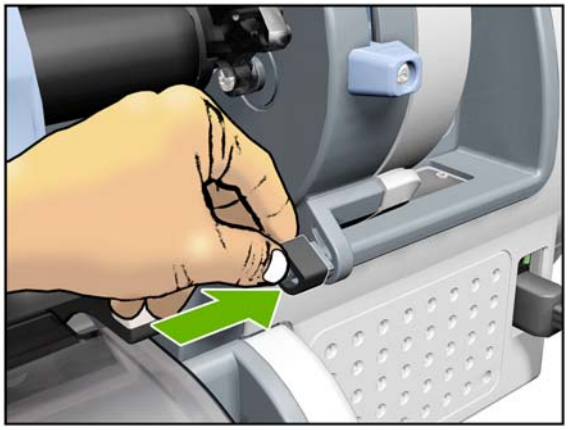

Roll cover upper bumpers (screwdriver)

1.

2.

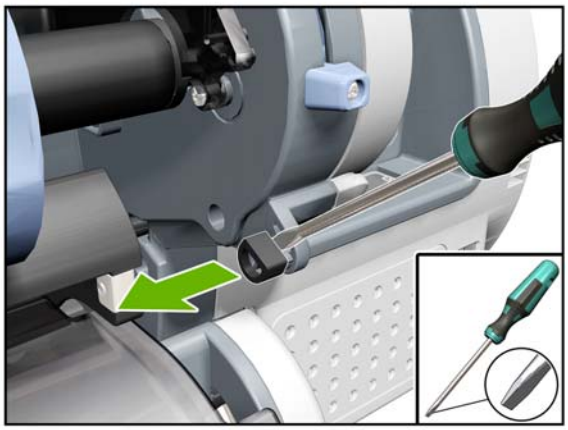

3.

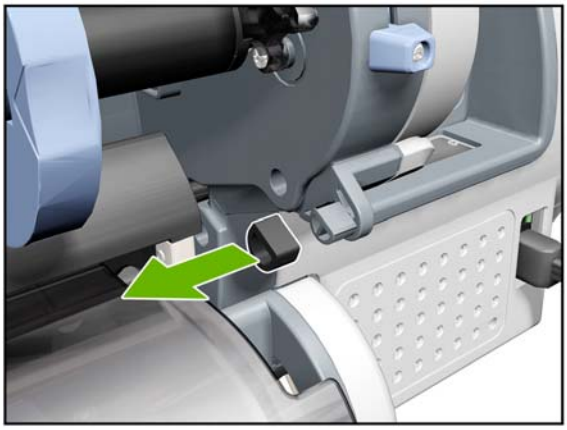

4.

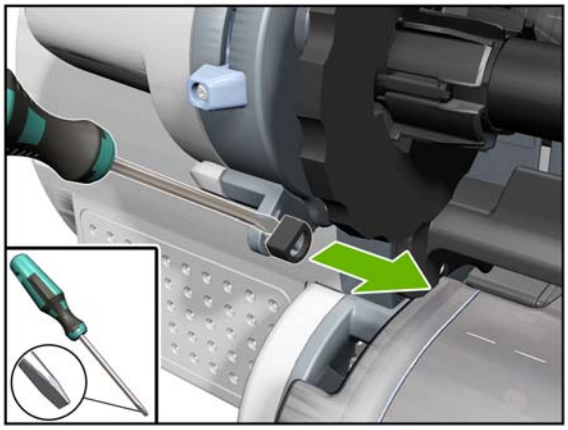

5.

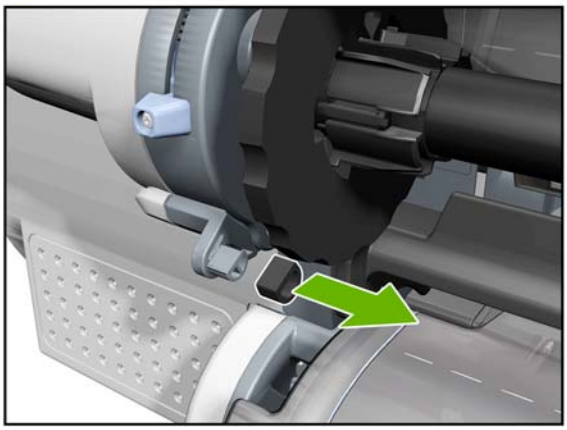

6.

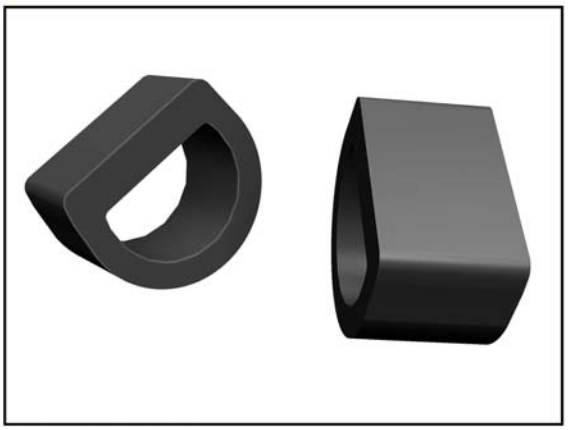

7.
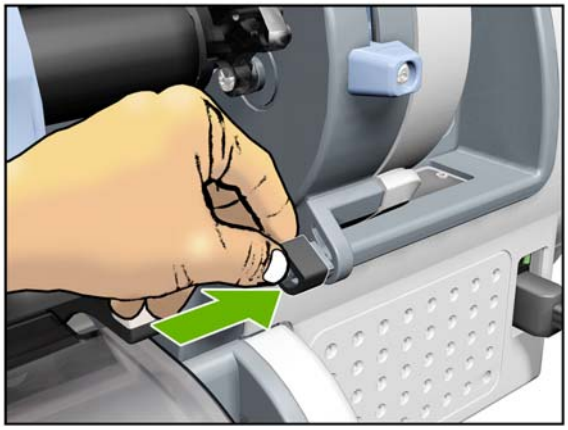
8.